CERTIFIED BY

ISO 9001
BUREAU VERITAS
Certification

UKAS QUALITY MANAGEMENT 008

IBR Approved

SUNFORD®

SUNFORD VALVES COMPANY

AN ISO 9001:2015 CERTIFIED COMPANY

Mfg. of High Quality Industial Valves.

COMPANY PROFILE

SUNFORD®

BUREAU VERITAS Certification

SUNFORD VALVES COMPANY

PLOT NO. D- 9/21, ROAD NO. 2, NEAR SACHIN PAPER MILL, HOJIWALA INDUSTRIAL ESTATE, SACHIN, SURAT – 394 230, GUJARAT, INDIA.

Bureau Veritas Certification Holding SAS – UK Branch certifies that the Management System of the above organization has been audited and found to be in accordance with the requirements of the Management System standard detailed below.

Standard

ISO 9001:2015

Scope of certification

MANUFACTURE AND SUPPLY OF GATE VALVE, GLOBE VALVE, MANUAL AND AUTO BALL VALVE, CHECK VALVE, CONTROL VALVE, BUTTERFLY VALVE, STRAINER, FLUSH BOTTOM VALVE

Original cycle start date: **19 November 2019**
Expiry date of previous cycle: **Not Applicable**
Certification Audit date: **19 September 2019**
Certification cycle start date: **19 November 2019**
Subject to the continued satisfactory operation of the organization's Management System, this certificate expires on: **18 November 2022**
Certificate No. **IND.19.10523U** Version : **1** Revision date: **19 November 2019**

Signed on behalf of BVCH SAS – UK Branch
Jagdheesh N. MANGAN
Head – CERTIFICATION, South Asia
Commodities, Industry & Facilities Division

UKAS MANAGEMENT SYSTEMS 0008

Certification body address: *5th Floor, 66 Prescot Street, London, E1 8HG, United Kingdom.*

Local office: *Bureau Veritas (India) Private Limited (Certification Business) 72 Business Park, Marol Industrial Area, MIDC Cross Road "C", Andheri (East), Mumbai – 400 093, India.*

Further clarifications regarding the scope of this certificate and the applicability of the management system requirements may be obtained by consulting the organization. To check this certificate validity please call **+91 22 6274 3900.**

Sunford valves company is a Bureau Veritas Certified leading Industrial Valves Manufacturers based in Surat, India, managed by dynamic and highly technically qualified partners and professionals Sunford Valves is a truly integrated and incredible innovative company performing activities include the design, material procurement, manufacturing, assembly and testing of valves. Our experience of 3 decades in valve industry is the key to our success & recognition in the Indian market.

SUNFORD manufactures Gate, Globe, Check, Ball, Butterfly, Wafer Type Check Valve, Strainers etc. in all size and class with any material of construction as per customer requirement like Carbon Steel, Alloy Steel, Stainless Steel, Duplex, Monel etc. adhering to National and International Standards such as API 600, API 602, BS 1873, BS 1868, BS 5351, BS 5352 etc. The organization has excellent in house manufacturing and testing facilities with state of art technology for Design and Manufacture of Industrial Valves. The organization has an added advantage of experienced and trained personnel working with the motto of Quality Products, Best Services and Timely Delivery at competitive Prices to remain customer's first choice.

Design and Engineering

Sunford engineering department's mission is design innovation. Our ability, experience and expertise through the use of sophisticated technology and CAD/CAM equipment results in the manufacturing high quality industrial valves for wide range of applications.

Manufacturing

Sunford Valves manufacturing unit is equipped with latest machineries, equipments includes CNC machines as well as semi automatic machine and test facilities spread over 14000 sq.ft area. Our production team of skilled workers ensure to employee latest state of art modern techniques in the entire cycle of production under stringent quality control procedures. All industrial valves manufactured to the highest degree of accuracy to ensure trouble free long life and guaranteed interchangeability of valves and spares.

Quality

Certified by ISO 9001:2015
Lean Manufacturing Practices Follows Six Sigma, Kaizen, 5S , TQM & Total customer Satisfaction. In-houseFull Scale Testing Facility.

Customer Service

Sunford has fully integrated customer services division, which fully geared to react speedily to all customers inquiries and serve them by providing best solution suitable for their requirements.

Industries We Serve

Textile, Chemical, Pharmaceutical, Oil & Gas Processing, Petrochemical, Power Plants, Marine, Packaging, Steel and Cement, Water Treatment, Food & Beverages, Cooling Plants, Pulp & Paper Industries.

Our unit is approved by Bureau Veritas ISO 9001:2015 certification and will provide all valves with 3rd party inspection.

Sunford Valves Advantages

- Strong management team, stable company
- Products proven to offer:
- Low emissions
- Easy maintenance
- Long and reliable service
- Low total cost of ownership
- Quality that lasts

What Gives Us An Edge Over Others?

- Latest cutting edge technology
- Safe and sound operations
- Customized solutions
- Premium quality valves of variegated types
- Cost-effective
- Timely delivery
- End-to-end solutions
- Innovative products

Our Commitment

- To understand Customers' NEEDs first before proposing our product.
- To keep providing competitive RATES by continuously improvement in process without compromising in quality.
- To provide continuously support to our customer and go beyond their expectations in terms of quality, delivery and after sales services.

CONTENTS

INDUSTRIES WE SERVE

- Chemical Industries
- Pharmaceutical Industries
- Petrochemical Plants
- Textile Industries
- OEM & Contractors
- Pulp, Paper, Sugar Industries
- Water Treatment Plants
- Steel & Power Plants

PROCESS ISOLATION / MANUAL VALVES & FILTERS

SUNFORD®

- **GATE VALVES** (ANSI CLASS 150/300/600)
- **GLOBE VALVES** (ANSI CLASS 150/300/600)
- **CHECK VALVES** (ANSI CLASS 150/300/600)
- **STRAINERS & FILTERS** (ANSI CLASS 150/300/600)

Gate Valve Class 150/300/600

SUNFORD®

DESIGN & MANUFACTURING STANDARDS

VALVE DESIGN / SHELL THICKNESS	:	API 600
FACE TO FACE	:	ASME B 16.10
FLANGED END CONNECTIONS	:	ASME B 16.5
PRESSURE TEMP. RATINGS	:	ASME B 16.34
BUTT WELD DIMENSION	:	API B 16.25
INSPECTION & TESTING	:	API 598

SPECIAL FEATURES OF SUNFORD VALVES

- Round Body & Bonnet Design
- Non-rotating rising stem.
- Flexible & Fully Guided Wedge
- Full port design.
- Welded / Renewable Seat Rings
- Flanged / butt-welding end connections.
- Stelliting on seat and wedge if required.
- Low Operating Torque
- Outside Yoke & Screw Design
- Bolted Bonnet
- SS+Graphite Gasket
- Larger dia handwheel.
- Actuator / Automation available.

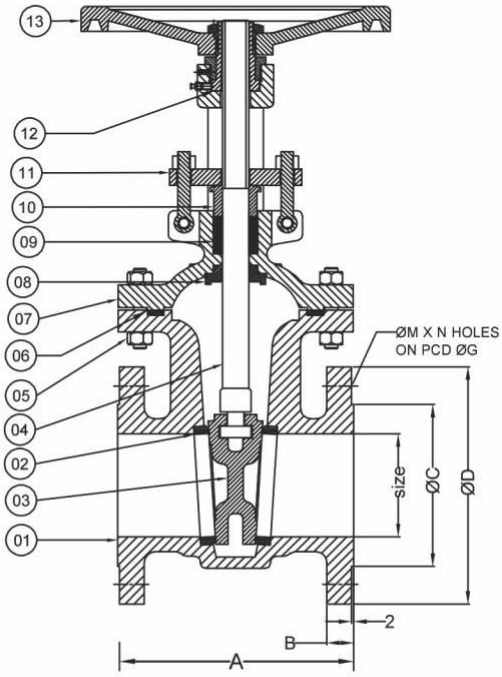

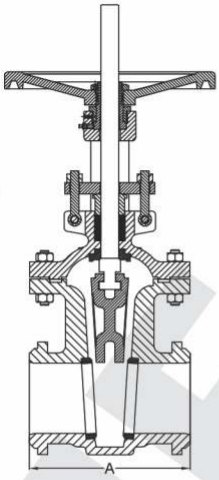

Buttweld End
(Open Valve)

PART LIST

SR. NO.	ITEM DESCRIPTION	MATERIAL
1	BODY	ASTM A 216 GR. WCB/A 352 LCB/ A 217 WC6 / A 351 CF8 / CF8M / IS 210 GR 220
2	SEAT RING	ASTM A 216 GR. WCB + 13% CR./CA15/ CF8/CF8M
3	WEDGE	ASTM A 216 GR. WCB + 13% CR./CA15/ CF8/CF8M
4	SPINDLE	AISI 410 / AISI 304 / AISI 316
5	STUD & NUT	ASTM A 193 GR. B7/194 GR 2H
6	GASKET	S.S 304 SPIRAL WOULD + GRAPHITE
7	BONNET	ASTM A 216 GR. WCB/A 352 LCB/ A 217 WC6 / A 351 CF8 / CF8M / IS 210 GR 220
8	BACK SEAT BUSH	AISI 410 / AISI 304 / AISI 316
9	GLAND PACKING	GRAFOIL / GRAPHITE MOULDED RING
10	GLAND BUSH	AISI 410
11	GLAND FLOWER	CAST STEEL
12	YOKE SLEEVE	AL BRONZE / EN8 / D2
13	HAND WHEEL	SG IRON

AVAILABLE MODIFICATIONS

- Trim Changes
- End Connection Modification
- By-pass
- Handwheel Extensions
- Customer Specified Coatings
- Packing & Gasket Change
- Operator Mounting
- Choice of Solid or Split Wedge

HYDRAULIC TEST PRESSURE 150#		
1	BODY	32 KG/CM^2
2	SEAT & BACK SEAT	23 KG/CM^2
HYDRAULIC TEST PRESSURE 300#		
1	BODY	78 KG/CM^2
2	SEAT & BACK SEAT	58 KG/CM^2
HYDRAULIC TEST PRESSURE 600#		
1	BODY	150 KG/CM^2
2	SEAT & BACK SEAT	110 KG/CM^2
PNEUMATIC TEST PRESSURE		
1	AIR PRESSURE	08 KG/CM^2

ASME CLASS 150								ASME CLASS 300							
SIZE	A	B	ØC	ØD	ØM	N	ØG	SIZE	A	B	ØC	ØD	ØM	N	ØG
15	108	9.6	34.9	90	16	4	60.3	-	-	-	-	-	-	-	-
20	117	10.6	42.9	100	16	4	69.9	-	-	-	-	-	-	-	-
25	127	11.1	51	110	16	4	79	25	165	17.5	51	125	19	4	89
40	165	14.3	73	125	16	4	98.5	40	190	20.5	73	155	22	4	114
50	178	16	92	150	19	4	121	50	216	22	92	165	19	8	127
65	190	17.5	105	180	19	4	140	65	241	25	105	190	22	8	149
80	203	19.1	127	190	19	4	152	80	282	28.5	127	210	22	8	168
100	229	24	157	230	19	8	191	100	305	32	157	255	22	8	200
125	254	24	186	255	22	8	216	125	381	35	186	280	22	8	235
150	267	25	216	280	22	8	241	150	403	36.5	216	320	22	12	270
200	292	28.5	270	345	22	8	298	200	419	41	270	380	25	12	330
250	330	30	324	405	25	12	362	250	457	47.5	324	445	29	16	387
300	356	32	381	485	25	12	432	300	502	51	381	520	32	16	451

Forged Steel Gate Valve Class 800/1500/2500

SUNFORD®

DESIGN & MANUFACTURING STANDARDS

VALVE DESIGN / SHELL THICKNESS	:	API 602 / ISO 15761
FACE TO FACE	:	ASME B 16.10
SOCKET/SCREWED/BUTT END CONNECTIONS	:	ASME B 16.11/ASME B 1.20.1/ ASME B 16.25
PRESSURE TEMP. RATINGS	:	ASME B 16.34
INSPECTION & TESTING	:	API 598

SPECIAL FEATURES OF SUNFORD VALVES

- Outside screw and toke (OS & Y)
- Bolted bonnet.
- Choice of WB, welded bonnet.
- Single wedge, fully guided.
- Renewable seat rings.
- Yoke integral with bonnet.
- Rising stem and non-rising hand.
- SW, screwed ends.
- BW, butt weld ends.
- Flanged ends.
- SS+Graphite Gasket

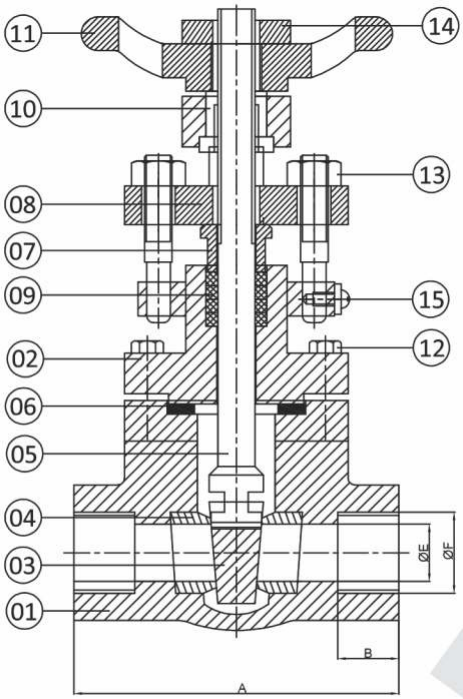

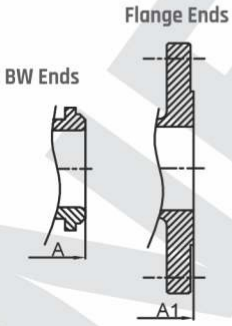

PART LIST

SR. NO.	ITEM DESCRIPTION	MATERIAL
1	BODY	FORGE STEEL ASTM A 105 / F 182 /F 304/ F 316
2	BONNET	FORGE STEEL ASTM A 105 / F 182 /F 304/ F 316
3	WEDGE	AISI 410 (13% CR.) / 304 / 316
4	SEAT RING	AISI 410 (13% CR.) / 304 / 316
5	SPINDLE	AISI 410 (13% CR.) / 304 / 316
6	GASKET	S.S 316 SPIRAL WOULD + GRAPHOIL
7	GLAND BUSH	AISI 410 (410 CR.)
8	GLAND FLANGE	ASTM A 105
9	GLAND PACKING	GRAPHITE MOULDED RING
10	YOKE SLEEVE	M.S
11	HAND WHEEL	C.I
12	BOLT	ASTM A193Gr. B7
13	EYE BOLT	FORGED C.S
14	HANDWHEEL NUT	C.S
15	SCREW AND WASHER.	M.S

ASME CLASS 800					ASME CLASS 1500					ASME CLASS 2500				
SIZE	A	ØE	H (O)	H (C)	SIZE	A	ØE	H (O)	H (C)	SIZE	A	ØE	H (O)	H (C)
15	87	9.5	152	130	15	92	9.5	158	133	15	106	7.0	189	155
20	92	12.7	158	133	20	106	12.7	189	155	20	127	12.5	239	200
25	106	17.5	189	155	25	127	15.9	239	200	25	142	15.5	288	235
40	127	28.6	239	200	40	142	27	288	235	-	-	-	-	-
50	142	36.5	288	235	50	-	-	-	-	-	-	-	-	-

HYDRAULIC TEST PRESSURE 800#			HYDRAULIC TEST PRESSURE 1500#			PNEUMATIC TEST PRESSURE		
1	BODY	211 KG/CM^2	1	BODY	388 KG/CM^2	1	AIR PRESSURE	08 KG/CM^2
2	SEAT & BACK SEAT	152 KG/CM^2	2	SEAT & BACK SEAT	281 KG/CM^2			

Globe Valve Class 150/300/600

SUNFORD®

DESIGN & MANUFACTURING STANDARDS

VALVE DESIGN / SHELL THICKNESS	:	BS 1873
FACE TO FACE	:	ASME B 16.10
FLANGED END CONNECTIONS	:	ASME B 16.5
PRESSURE TEMP. RATINGS	:	ASME B 16.34
BUTT WELD DIMENSION	:	API B 16.25
INSPECTION & TESTING	:	API 598

SPECIAL FEATURES OF SUNFORD VALVES

- Full Port Design
- Plug type disc.
- Bolted bonnet
- Outside screw & yoke design
- Low Operating Torque
- Welded / Renewable seatrings
- SS+Graphite Gasket
- Backseat Arrangement
- Online Gland Change
- Low pressure drop
- Rising Stem & Handwheel
- Actuator Automation Available
- Stelliting on seat and plug if required.

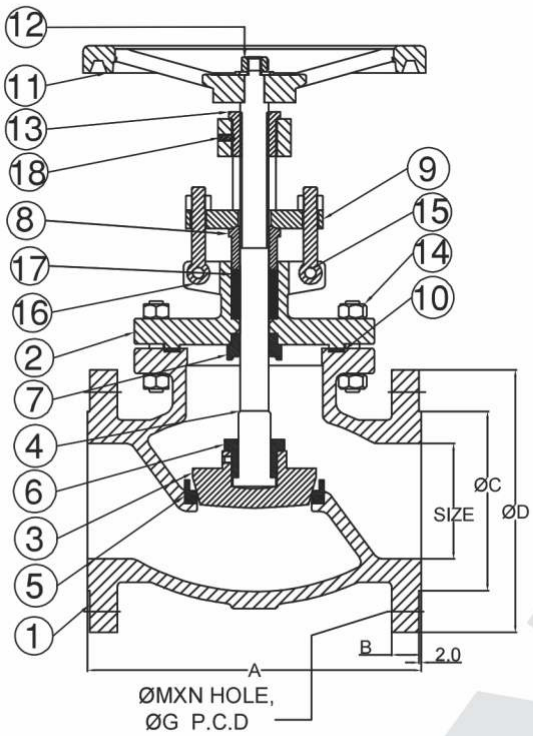

Buttweld Ends
(Open Valve)

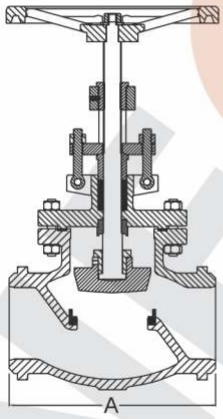

PART LIST

SR. NO.	ITEM DESCRIPTION	MATERIAL
1	BODY	ASTM A 216 GR. WCB/A 352 LCB/ A 217 WC6 / A 351 CF8 / CF8M / IS 210 GR 220
2	BONNET	ASTM A 216 GR. WCB/A 352 LCB/ A 217 WC6 / A 351 CF8 / CF8M / IS 210 GR 220
3	DISC	AISI 410 (13%CR.)/CA15 / 304 / 316
4	SPINDLE	AISI 410 / 304 / 316
5	SEATRING	AISI 410 (13%CR.)/CA15 / 304 / 316
6	DISC NUT	AISI 410 / 304 / 316
7	BACKSEAT BUSH	AISI 410 / 304 / 316
8	GLAND BUSH	AISI 410 / 304 / 316
9	GLAND FLANGE	C.S
10	GASKET	SP. WOUND SS316 GRAPHOIL
11	HAND WHEEL	S.G. IRON
12	HAND WHEEL NUT	ASTM A 194 GR. 2H
13	YOKE BUSH	AL. BRONZE/ GM/ D2/ EN8
14	STUD NUT	ASTM A 193 GR.B7/2H
15	BOLT NUT	ASTM A 194 GR. 2H
16	EYE BOLT & NUT	ASTM A 194 GR. 2H
17	GLAND PACKING	GRAFOIL / GRAPHITE MOULDED RING
18	GURB SCREW	C.S

AVAILABLE MODIFICATIONS

- Trim Changes
- End Connection Modification
- By-pass
- Handwheel Extensions
- Customer Specified Coatings
- Packing & Gasket Change
- Operator Mounting

HYDRAULIC TEST PRESSURE 150#		
1	BODY	32 KG/CM^2
2	SEAT & BACK SEAT	23 KG/CM^2
HYDRAULIC TEST PRESSURE 300#		
1	BODY	78 KG/CM^2
2	SEAT & BACK SEAT	58 KG/CM^2
HYDRAULIC TEST PRESSURE 600#		
1	BODY	150 KG/CM^2
2	SEAT & BACK SEAT	110 KG/CM^2
PNEUMATIC TEST PRESSURE		
1	AIR PRESSURE	08 KG/CM^2

ASME CLASS 150								ASME CLASS 300							
SIZE	A	B	ØC	ØD	ØM	N	ØG	SIZE	A	B	ØC	ØD	ØM	N	ØG
15	108	9.6	34.9	90	16	4	60.3	-	-	-	-	-	-	-	-
20	117	10.6	42.9	100	16	4	69.9	-	-	-	-	-	-	-	-
25	127	11.1	51	108	16	4	79	25	203	17.5	51	125	19	4	89
40	165	14.3	73	125	16	4	98.5	40	229	20.5	73	155	22	4	114
50	203	16	92	150	19	4	121	50	267	22	92	165	19	8	127
65	216	17.5	105	180	19	4	140	65	292	25	105	190	22	8	149
80	241	19.1	127	190	19	4	152	80	318	28.5	127	210	22	8	168
100	292	24	157	230	19	8	191	100	356	32	157	255	22	8	200
125	356	24	186	255	22	8	216	125	400	35	186	280	22	8	235
150	406	25	216	278	22	8	241	150	444	36.5	216	320	22	12	270
200	495	28.5	270	345	22	8	298	200	559	41	270	380	25	12	330
250	622	30	324	405	25	12	362	250	622	47.5	324	445	29	16	387
300	699	32	381	485	25	12	432	300	711	51	381	520	32	16	451

Forged Steel Globe Valve Class 800/1500/2500

SUNFORD®

DESIGN & MANUFACTURING STANDARDS

VALVE DESIGN / SHELL THICKNESS	:	BS 1873
FACE TO FACE	:	ASME B 16.10
FLANGED END CONNECTIONS	:	ASME B 16.5
PRESSURE TEMP. RATINGS	:	ASME B 16.34
BUTT WELD DIMENSION	:	API B 16.25
INSPECTION & TESTING	:	API 598

SPECIAL FEATURES OF SUNFORD VALVES

- Outside screw and toke (OS & Y)
- Bolted bonnet.
- Choice of WB, welded bonnet.
- Loose disc, choice of plug or ball.
- Yoke integral with bonnet.
- Rising stem and hand wheel.
- Horizontal service.
- SW, Socket-welding ends.
- SC, screwed ends.
- BW, butt weld ends.

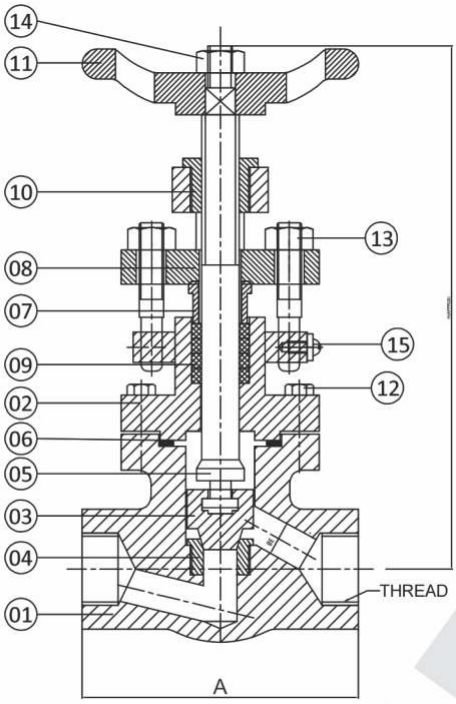

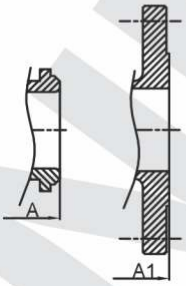

PART LIST

SR. NO.	ITEM DESCRIPTION	MATERIAL
1	BODY	FORGE STEEL ASTM A 105 / 182 / F 182 / F 304 / F 316
2	BONNET	FORGE STEEL ASTM A 105 / 182 / F 182 / F 304 / F 316
3	DISC	AISI 410 (13% CR.) / 304 / 316
4	SEAT RING	AISI 410 (13% CR.) / 304 / 316
5	SPINDLE	AISI 410 (13% CR.) / 304 / 316
6	GASKET	SS 316 SPIRAL WOUND + GRAPHITE
7	GLAND BUSH	AISI 410 (410 CR.)
8	GLAND FLANGE	ASTM A 105
9	GLAND PACKING	GRAPHITE ASBESTOS + INCONEL
10	YOKE SLEEVE	M.S.
11	HAND WHEEL	C.I.
12	BOLT & NUT	ASTM A 193 GR. B7 / ASTM A 194 GR. 2H
13	EYE BOLT	FORGED C.S.
14	HANDWHEEL NUT	C.S.
15	SCREW & WASHER	M.S.

ASME CLASS 800					ASME CLASS 1500					ASME CLASS 2500				
SIZE	A	ØE	H (O)	H (C)	SIZE	A	ØE	H (O)	H (C)	SIZE	A	ØE	H (O)	H (C)
15	87	9	153	147	15	92	8	158	149	15	106	7.0	194	182
20	92	12	158	149	20	106	9	194	182	20	127	8.0	222	208
25	106	17	194	182	25	127	14	222	208	25	142	12.0	263	245
40	127	25	222	208	40	142	25	263	245	-	-	-	-	-
50	142	29	263	245	50	-	-	-	-	-	-	-	-	-

HYDRAULIC TEST PRESSURE 800#			HYDRAULIC TEST PRESSURE 1500#			PNEUMATIC TEST PRESSURE		
1	BODY	211 KG/CM^2	1	BODY	388 KG/CM^2	1	AIR PRESSURE	08 KG/CM^2
2	SEAT & BACK SEAT	152 KG/CM^2	2	SEAT & BACK SEAT	281 KG/CM^2			

Swing Check Valve Class 150/300/600

SUNFORD®

DESIGN & MANUFACTURING STANDARDS

VALVE DESIGN / SHELL THICKNESS	:	BS 1868
FACE TO FACE	:	ASME B 16.10
FLANGED END CONNECTIONS	:	ASME B 16.5
PRESSURE TEMP. RATINGS	:	ASME B 16.34
BUTT WELD DIMENSION	:	API B 16.25
INSPECTION & TESTING	:	API 598/ BS 5146

SPECIAL FEATURES OF SUNFORD VALVES

- Body full bore to ensures streamlined flow hence no pressure drop.
- Bolted Cover
- Swing type, anti-rotation disc.
- Welded / Renewable seat rings
- Non-penetrate disc shaft
- Self aligning free floating disc ensure perfect sealing.
- Horizontal or vertical service
- Flange or butt welding ends

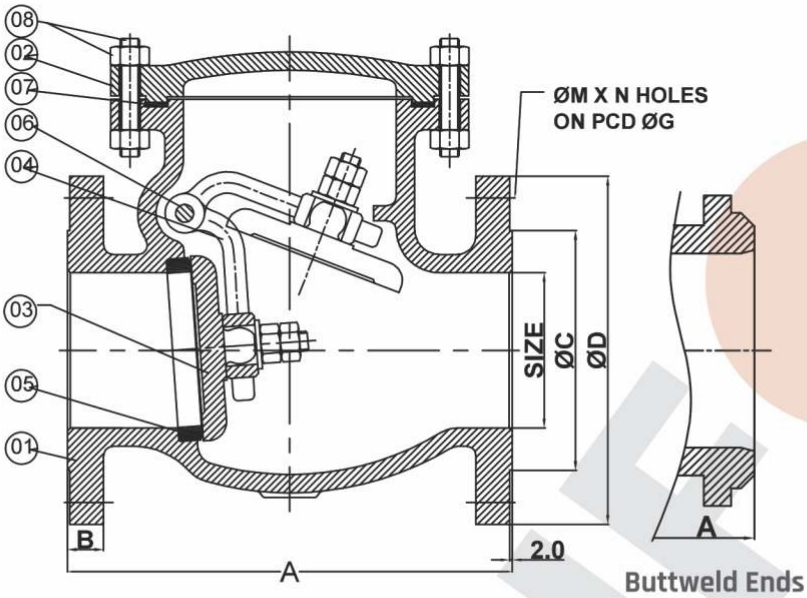

PART LIST

SR. NO.	ITEM DESCRIPTION	MATERIAL
1	BODY	ASTM A 216 GR. WCB/A 352 LCB/ A 217 WC6 / A 351 CF8 / CF8M / IS 210 GR 220
2	COVER	ASTM A 216 GR. WCB/A 352 LCB/ A 217 WC6 / A 351 CF8 / CF8M / IS 210 GR 220
3	DISC	AISI 410 / 304 / 316
4	LEVER	ASTM A 216 GR. WCB/A 352 LCB/ A 217 WC6 / A 351 CF8 / CF8M / IS 210 GR 220
5	SEAT RING	AISI 410 / 304 / 316
6	LEVER PIN	AISI 410 / 304 / 316
7	GASKET	SS 304 SPIRAL WOUND WITH GRAPHITE
8	STUD & NUT	ASTM A 193 Gr B7 / 194 Gr 2H

AVAILABLE MODIFICATIONS

- Trim Changes
- End Connection Modification
- Customer Specified Coatings
- Packing & Gasket Change
- Weld & Bore Changes

HYDRAULIC TEST PRESSURE 150#		
1	BODY	32 KG/CM^2
2	SEAT & BACK SEAT	23 KG/CM^2
HYDRAULIC TEST PRESSURE 300#		
1	BODY	78 KG/CM^2
2	SEAT & BACK SEAT	58 KG/CM^2
HYDRAULIC TEST PRESSURE 600#		
1	BODY	150 KG/CM^2
2	SEAT & BACK SEAT	110 KG/CM^2
PNEUMATIC TEST PRESSURE		
1	AIR PRESSURE	08 KG/CM^2

ASME CLASS 150								ASME CLASS 300							
SIZE	A	B	ØC	ØD	ØM	N	ØG	SIZE	A	B	ØC	ØD	ØM	N	ØG
25	127	14.2	51	108	16	4	79	25	216	17.5	51	125	19	4	89
40	165	17.5	73	125	16	4	98.5	40	241	20.5	73	155	22	4	114
50	203	19	92	150	19	4	121	50	267	22	92	165	19	8	127
65	216	22.3	105	180	19	4	140	65	292	25	105	190	22	8	149
80	241	24	127	190	19	4	152	80	318	28.5	127	210	22	8	168
100	292	24	157	230	19	8	191	100	356	32	157	255	22	8	200
125	330	24	186	255	22	8	216	125	400	35	186	280	22	8	235
150	356	25	216	278	22	8	241	150	444	36.5	216	320	22	12	270
200	495	28.5	270	345	22	8	298	200	533	41	270	380	25	12	330
250	622	30	324	405	25	12	362	250	622	47.5	324	445	29	16	387
300	699	32	381	485	25	12	432	300	711	51	381	520	32	16	451

Disk Check Valves PN 16 / PN 40

SUNFORD®

DESIGN & MANUFACTURING STANDARDS

VALVE DESIGN / SHELL THICKNESS : MFG. STD.

PRESSURE TEMP. RATINGS : ASME B 16.34

INSPECTION & TESTING : API 598

SPECIAL FEATURES

- Full Bore Design
- Robust Construction
- Easy Maintenance
- Low Pressure Drop

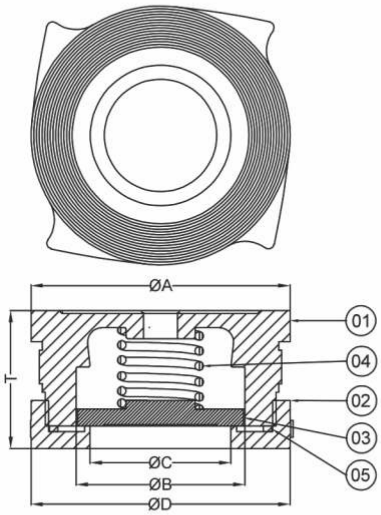

DIMENSIONS					
VALVE SIZE	ØA	ØB	ØC	ØD	T
15	43	29	15	41	16
20	52	35	19	44	19
25	63	44	25	55	22
32	75	54	32	65	28
40	82	65	38	82	36
50	91	77	50	93	40
65	105	97	63	113	48
80	126	111	75	128	56
100	154	130	100	148	60
150	222	191	150	201	105
200	277	250	200	261	140

TOLERANCE ± 2.0 MM

PART LIST		
SR. NO.	ITEM DESCRIPTION	MATERIAL
1	BODY	S.S. 304/ S.S. 316 / S.S. 304L/ S.S. 316L
2	NUT	S.S. 304/ S.S. 316 / S.S. 304L/ S.S. 316L
3	DISC	S.S. 304/ S.S. 316 / S.S. 304L/ S.S. 316L
4	SPRING	Stainless Steel
5	PACKING	Virgin PTFE

HYDRAULIC TEST PRESSURE		
1	Body	32 KG/CM^2
2	Seat	23 KG/CM^2
3	Air Test	8 KG/CM^2

Wafer Check Valves PN 10/PN 16

SUNFORD®

DESIGN & MANUFACTURING STANDARDS

VALVE DESIGN / SHELL THICKNESS : MFG. STD.

PRESSURE TEMP. RATINGS : ASME B 16.34

INSPECTION & TESTING : API 598

SPECIAL FEATURES

- Robust Construction
- Easy Maintenance
- Low Pressure Drop

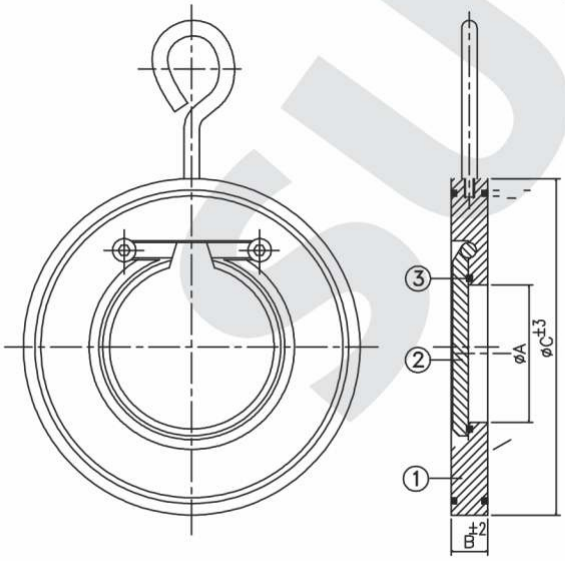

DIMENSIONS							
SIZE	A	B	C				
			PN10	PN16	ANSI150#	BS10D	BS10E
25	14	16	72	72	64	69	69
40	22	19	93	93	86	86	86
50	30	19	108	108	104	97	97
65	40	19	128	128	123	110	110
80	52	19	143	143	136	129	129
100	71	91	163	163	144	161	161
125	93	19	193	193	174	193	193
150	114	19	219	219	221	218	215
300	230	38	379	385	409	385	383
350	270	44.5	438	444	449	446	446
400	310	51	489	496	512	496	496

TOLERANCE ± 2.0 MM

PART LIST		
SR. NO.	ITEM DESCRIPTION	MATERIAL
1	BODY	WCB / SS 304 / SS 316 / SS 304L / SS316L
2	DISC	MS / SS 304 / SS 316 / SS 304L / SS316L
3	SEAT	NITRILE / EPDM / VITON / SILICON / PTFE

Pressure Rating	HYDROSTATIC SHELL TEST		HYDROSTATIC SEAT TEST	
	Kg / CM2	PSI	Kg / CM2	PSI
PN16	22	310	16	225
PN10	15	210	10	140

Strainers Y Type Class 150/300/600

SUNFORD®

DESIGN & MANUFACTURING STANDARDS

VALVE DESIGN / SHELL THICKNESS	:	ISO 15761
FACE TO FACE	:	ASME B 16.10
SOCKET/SCREWED/BUTT END CONNECTIONS	:	ASME B 16.11/ASME B 1.20.1 /ASME B 16.25
PRESSURE TEMP. RATINGS	:	ASME B 16.34
INSPECTION & TESTING	:	API 598

SPECIAL FEATURES OF SUNFORD VALVES

- Bolted Cover
- Very low pressure drop.
- Higher Filtrations Area
- Double or triple layers mesh.
- Easy maintenance.
- High performance.

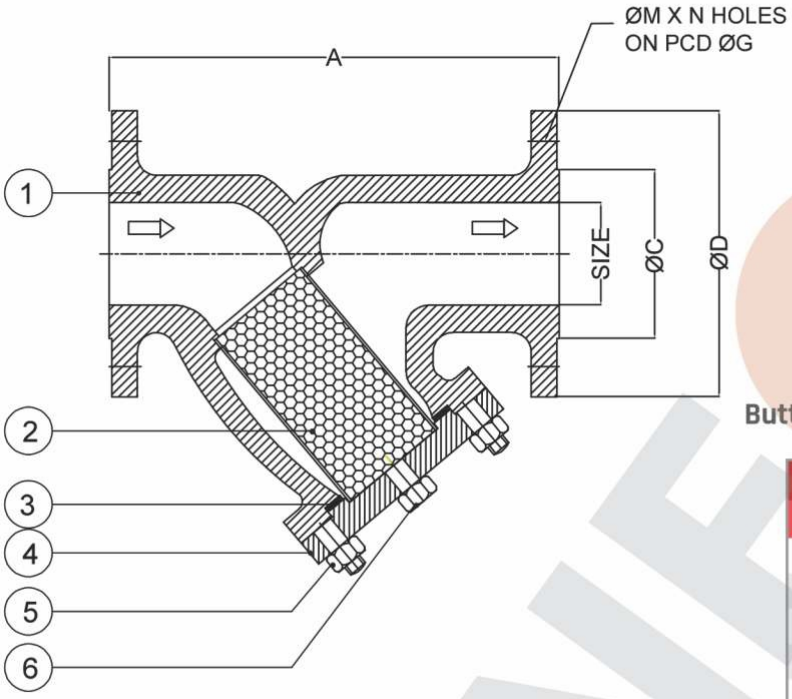

Buttweld Ends

PART LIST		
SR. NO.	ITEM DESCRIPTION	MATERIAL
1	BODY	ASTM A 216 GR. WCB/A 352 LCB/ A 217 WC6 / A 351 CF8 / CF8M / IS 210 GR 220
2	SCREEN	S.S. 304 40MESH X 37 SWG
3	GASKET	SPIRAL WOUND SS304
4	COVER	ASTM A 216 GR. WCB/A 352 LCB/ A 217 WC6 / A 351 CF8 / CF8M / IS 210 GR 220
5	STUD & NUT	ASTM A 193 GR.B7/194 GR.2H
6	PLUG	C.S. / SS304 / SS316

HYDRAULIC TEST PRESSURE 150#		
1	BODY	32 KG/CM^2
2	SEAT & BACK SEAT	-
HYDRAULIC TEST PRESSURE 300#		
1	BODY	78 KG/CM^2
2	SEAT & BACK SEAT	-
HYDRAULIC TEST PRESSURE 600#		
1	BODY	150 KG/CM^2
2	SEAT & BACK SEAT	-
PNEUMATIC TEST PRESSURE		
1	AIR PRESSURE	08 KG/CM^2

ASME CLASS 150								ASME CLASS 300							
SIZE	A	B	ØC	ØD	ØM	N	ØG	SIZE	A	B	ØC	ØD	ØM	N	ØG
40	165	17.5	73	125	16	4	98.5	40	229	20.5	73	155	22	4	114
50	203	19	92	152	19	4	121	50	267	22	92	165	19	8	127
65	216	22.3	105	180	19	4	140	65	292	25	105	190	22	8	149
80	243	24	127	190	19	4	152	80	318	28.5	127	210	22	8	168
100	292	24	157	229	19	8	191	100	356	32	157	255	22	8	200
150	406	25	216	278	22	8	241	150	444	36.5	216	320	22	12	270
200	495	28.5	270	343	22	8	298	200	559	41	270	380	25	12	330
250	622	30	324	406	25	12	362	250	622	47.5	324	445	29	16	387
300	699	32	381	483	25	12	432	300	711	51	381	520	32	16	451
350	787	35	413	533	28	16	476	350	838	54	413	583	32	20	564
400	914	37	470	540	28	16	597	400	864	57	470	648	35	20	572

Basket Type Strainer Class 150

SUNFORD®

DESIGN & MANUFACTURING STANDARDS

VALVE DESIGN / SHELL THICKNESS	:	ISO 15761
FACE TO FACE	:	ASME B 16.10
SOCKET/SCREWED/BUTT END CONNECTIONS	:	ASME B 16.11/ASME B 1.20.1 /ASME B 16.25
PRESSURE TEMP. RATINGS	:	ASME B 16.34
INSPECTION & TESTING	:	API 598

SPECIAL FEATURES OF SUNFORD VALVES

- Bolted Cover
- Very low pressure drop.
- Higher Filtrations Area
- Double or triple layers mesh.
- Easy maintenance.
- High performance.

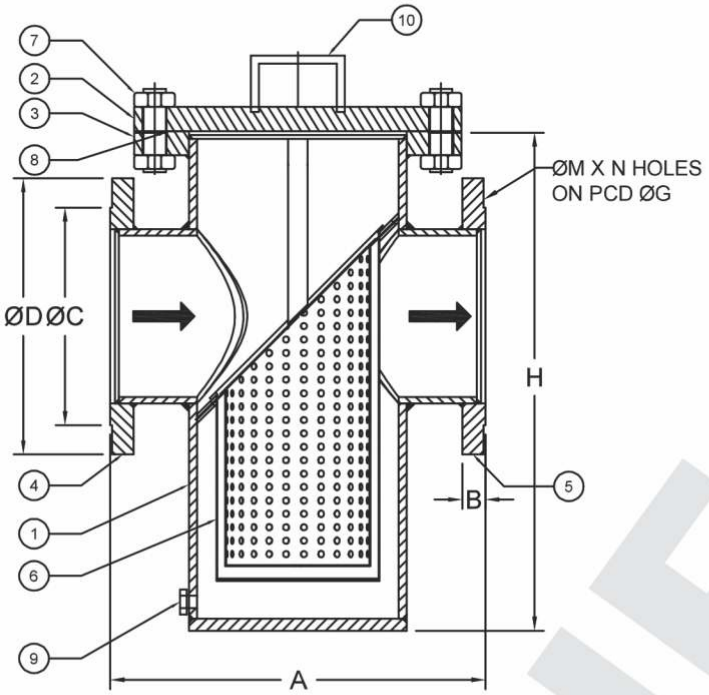

PART LIST		
SR. NO.	ITEM DESCRIPTION	MATERIAL
1	BODY	IS 2062 / SS 304 / SS 316
2	TOP COVER	IS 2062 / SS 304 / SS 316
3	BODY COVER	IS 2062 / SS 304 / SS 316
4	INLET FLANGE	IS 2062 / SS 304 / SS 316
5	OUTLET FLANGE	IS 2062 / SS 304 / SS 316
6	SCREEN	SS 304 / SS 316
7	COVER BOLT & NUT	CS / SS
8	GASKET	NITRILE / SS 304 + SPIRAL WOUND
9	DRAIN PLUG	ASTM A 105 / SS 304 / SS 316
10	LIFTING HANDLE	CS / SS

HYDRAULIC TEST PRESSURE 150#		
1	BODY	32 KG/CM^2
2	SEAT	-
PNEUMATIC TEST PRESSURE		
1	AIR PRESSURE	08 KG/CM^2

ANSI CLASS 150 - DIMENSIONS								
SIZE	A	H	B	ØC	ØD	ØM	N	ØG
25	200	300	11	51.0	108.0	16	4	79
40	260	330	14	73.0	127.0	16	4	98.5
50	260	335	16	92.0	152.0	19	4	120.5
65	260	350	17.5	105.0	178.0	19	4	140
80	300	365	19	127.0	190.5	19	4	152.5
100	330	420	24	157.0	229.0	19	4	190.5
125	400	455	24	186.0	255.0	22	8	216
150	400	480	25	216.0	279.0	22	8	241
200	465	620	28.5	270.0	343.0	22	8	298.4
250	515	770	30	324.0	406.0	25	12	362
300	575	940	32	381.0	483.0	25	12	432
350	680	1040	35	412.7	533.4	28.6	12	476.2
400	750	1085	36.5	469.9	496.9	28.6	16	539.7
450	850	1200	40	533.4	635.0	31.7	16	577.8
500	1000	1300	43	584.2	698.5	31.7	20	635.0
600	1200	1400	47.6	692.1	812.8	34.9	20	749.3

TOLERANCE ± 2.0 MM

CONTROL VALVES

- **Globe Type Three-way Control Valves** (ANSI CLASS 150/300)
- **Globe Type Two-way Control Valves** (ANSI CLASS 150/300)
- **Y-Type Control Valves** (ANSI CLASS 150)

INTRODUCTION

SUNFORD's 2/3 way control valves are used to combine two flows or to divert one flow into two outlets. They are designed to replace and perform the functions of two single ported control valves acting in opposite directions, in converging or diverging liquid flow. They can be used to control the circulation of water, oil, sea water or other liquid in heating or cooling applications involving heat exchanger bypass control. They can also be used in blending systems and on-off selector systems.

SPECIFICATIONS DESIGN : ASME B16-34 VALVE

- SIZE : 15 to 250 mm (1/2" to 14")
- RATING : ANSI 150 to 300
- FACE TO FACE : MFG STD OR ISA S.75.03 up to 600#
- END CONNECTION : Flanged – 15mm to 250mm (1/2" to 10")
- BODY MATERIALS : Carbon Steel, CF8, CF8M, Chrome-moly Steel, Stainless Steel,Monel, Alloy20, Hastelloy B/C, Duplex Stainless Steel, Aluminum Bronze etc.
- BONNET : Standard upto 200˚C
  : Normalizing (Finned) between 200˚C to 450˚C
  : Extended cold service - 20˚C to - 100˚C
  : Cryogenic - 100□C to - 250□C
  : Bellows seals.
- GLAND PACKING : Grafoil / Carbon filled PTFE V Rings, Low Emission
- TRIM DESIGNS : Skirt Guided, Linear, Pressure Balance.
- TRIM MATERIALS : Stainless Steel, Alloy20, Monel, Duplex Stainless Steel, 13% Chrome Steel Hastelloy, Stellite (Alloy 6)
- CHARACTERISTICS : Equal Percentage, Linear and Quick Opening.
- SEAT LEAKAGE : As per ANSI/FCI-70-2 Class III. IV, V and VI (STANDARD LEAKAGE RATES)
  Metal to Metal Seating - Class IV, Less than 0.01% of rated Cv.
  Metal to Soft Seating – Class VI Bubble tight (Zero Leakage)

ACTUATOR TYPE : DIAPHRAGM, PISTON OR ELECTRIC.

- ACTUATOR ACTION : Direct / Reverse Acting.
  Cylinder: V Ring for Piston: Neoperene / EPDM / Silicon / Vitton
  AIR SUPPLY: 50 to 60 PSIG (3.5 to 4 Kg/cm□) AIR CONNECTION : 1/ 4 NPT
- DIAPHRAGM : Reinforced Nitrile / Neoprene. SPRING RANGES : AIR SUPPLY : 30 – 35 PSIG (2 – 2.5 Kg/cm²)
  AIR CONNECTION : 1/ 4" or 1/ 2" NPT

- **ACCESSORIES :** Valve Positioner - Pneumatic , Electro Pneumatic, Smart Positioner., solenoid valve, Top mounted Hand wheel

• DATA REQUIRED FOR CONTROL VALVE SELECTION

1. Type of Valve
2. Size of valve/ pipe line
3. Pressure & Temperature of flowing media
4. Flow rate
5. End Connection
6. Flowing Media
7. MOC

Control Valve 3 / 2way Cylinder Act. Class 150/300

SUNFORD®

DESIGN & MANUFACTURING STANDARDS

FACE TO FACE	:	As per Below Table
FLANGED END CONNECTIONS	:	ASME B 16.5
PRESSURE TEMP. RATINGS	:	ASME B 16.34
BUTT WELD DIMENSION	:	API B 16.25
INSPECTION & TESTING	:	API 598/ BS 5146

SPECIAL FEATURES OF SUNFORD VALVES

- Special Design for High Temperature Service
- High flow valve capacity and rangeability
- Heavy-duty stem
- Wide range of interchangeable trim sizes
- below seals available for positive stem sealing
- Comprehensively designed and tested to ensure its optimum performance for the tough process parameters specified
- Wide selection of actuators
- All testing performed to the requirements of ASME B 16.34

DIRECT ACTING

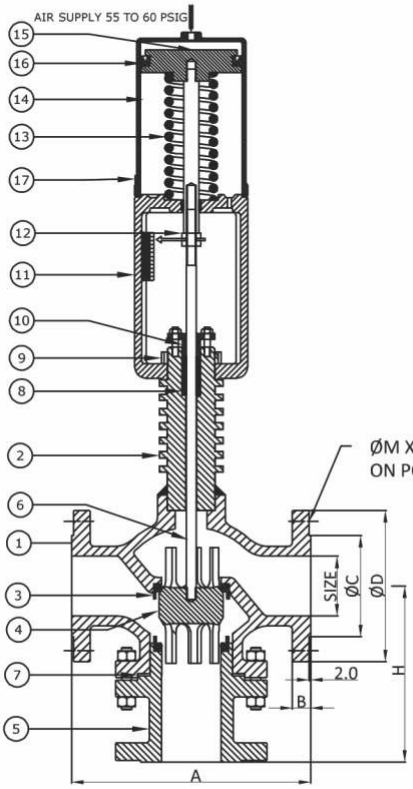

REVERSE ACTING

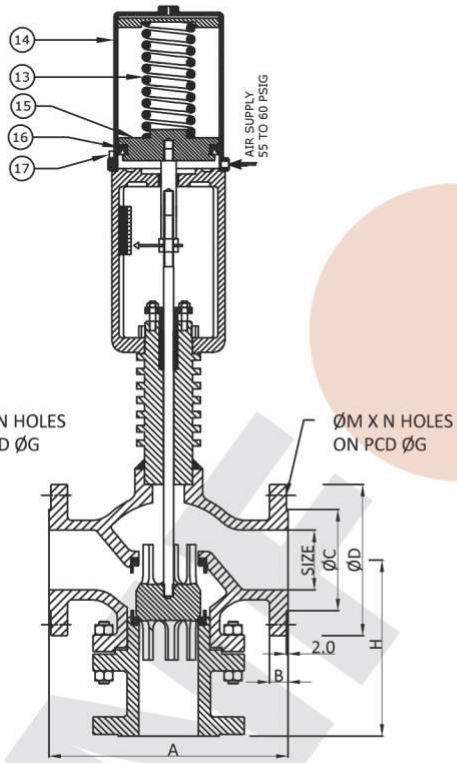

PART LIST

SR. NO.	ITEM DESCRIPTION	MATERIAL
1	BODY	ASTM A216 GR. WCB / ASTM A351 GR. CF8 / CF8M
2	BONNET	ASTM A216 GR. WCB / ASTM A351 GR. CF8 / CF8M
3	SEAT	AISI 304 / 316 / 410
4	PLUG	AISI 304 / 316 / 410
5	TAIL PIECE	ASTM A216 GR. WCB / ASTM A351 GR. CF8 / CF8M
6	STEM	AISI 304 / 316
7	GASKET	SS 304 SPW + GRAPHITE
8	GLAND	GRAFOIL
9	CHECK NUT	MS
10	GLAND FLANGE	AISI 304 / 316 / 410
11	STAND	SG IRON / ASTM A216 GR. WCB
12	SETTING NUT	ASTM A193 B7/A 194 2H
13	SPRING	STAINLESS STEEL
14	CYLINDER	SS 304
15	PISTON	SG IRON
16	"V" Ring	NITRILE RUBBER / VITON RUBBER
17	STUD & NUT	ASTM A193 B7 / A 194 2H

BUTTWELD END

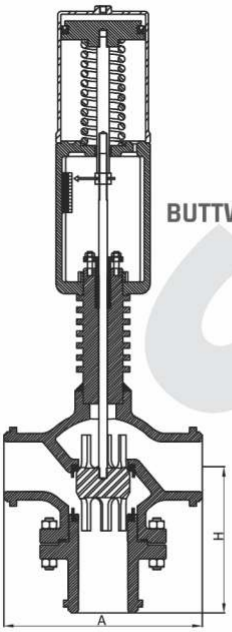

HYDRAULIC TEST PRESSURE

1	Body	32 Kg / cm²
2	Seat	23 Kg / cm²
3	Air Test	07 Kg / cm²

ANSI CLASS 150 - DIMENSIONS

SIZE	A	H	B	ØC	ØD	ØM	N	ØG
25	186	135	11.1	50.8	110	16	4	79
40	223	178	14.3	73.0	125	16	4	98.5
50	254	190	16	92.1	150	19	4	121
65	279	212	17.5	104.8	180	19	4	140
80	300	220	19	127.0	190	19	4	152
100	365	285	24	157.2	230	19	8	191
150	406	350	25	215.9	280	22	8	241
200	495	355	28.5	270	345	22	8	298

TOLERANCE ± 2.0 MM

Control Valve 3 / 2way Class 150/300

SUNFORD®

DESIGN & MANUFACTURING STANDARDS

FACE TO FACE	:	As per Below Table
FLANGED END CONNECTIONS	:	ASME B 16.5
PRESSURE TEMP. RATINGS	:	ASME B 16.34
BUTT WELD DIMENSION	:	API B 16.25
INSPECTION & TESTING	:	API 598/ BS 5146

SPECIAL FEATURES OF SUNFORD VALVES

- Special Design for High Temperature Service
- High flow valve capacity and rangeability
- Heavy-duty stem
- Wide range of interchangeable trim sizes
- below seals available for positive stem sealing
- Comprehensively designed and tested to ensure its optimum performance for the tough process parameters specified
- Wide selection of actuators
- All testing performed to the requirements of ASME B 16.34

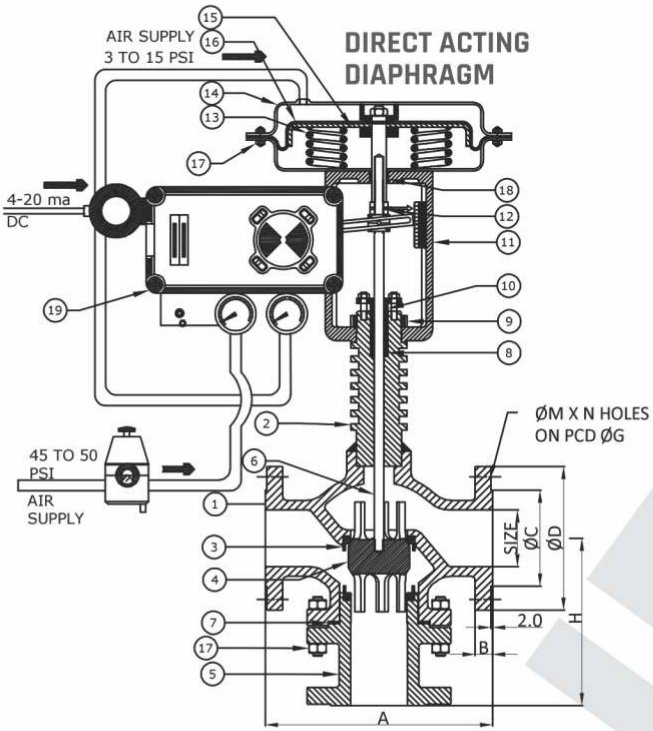

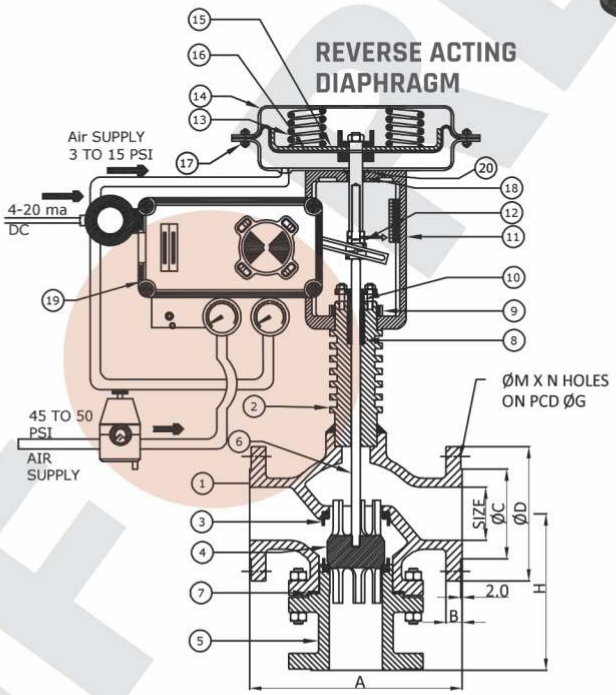

HYDRAULIC TEST PRESSURE

1	Body	32 Kg / cm²
2	Seat	23 Kg / cm²
3	Air Test	07 Kg / cm²

ANSI CLASS 150 - DIMENSIONS

SIZE	A	H	B	ØC	ØD	ØM	N	ØG
25	186	135	11.1	50.8	110	16	4	79
40	223	178	14.3	73.0	125	16	4	98.5
50	254	190	16	92.1	150	19	4	121
65	279	212	17.5	104.8	180	19	4	140
80	300	220	19	127.0	190	19	4	152
100	365	285	24	157.2	230	19	8	191
150	406	350	25	215.9	280	22	8	241
200	495	355	28.5	270	345	22	8	298

TOLERANCE ± 2.0 MM

PART LIST

SR. NO.	ITEM DESCRIPTION	MATERIAL
1	BODY	ASTM A216 GR. WCB / ASTM A351 GR. CF8/CF8M
2	BONNET	ASTM A216 GR. WCB / ASTM A351 GR. CF8/CF8M
3	SEAT	AISI 304/316/410
4	PLUG	AISI 304/316/410
5	TAIL PIECE	ASTM A216 GR. WCB ASTM A351 GR. CF8/CF8M
6	STEM	AISI 304 / 316
7	GASKET	SS 304 SPW + GRAPHITE
8	GLAND	GRAFOIL
9	CHECK NUT	MS
10	GLAND FLANGE	AISI 304 / 316 / 410
11	STAND	SG IRON / ASTM A216 GR. WCB
12	SETTING NUT	ASTM A193 B7 / A 192 2H
13	SPRING	STAINLESS STEEL
14	ACUATOR DOME	MILD STEEL
15	DIAPHRAGM PLATE	MILD STEEL
16	DIAPHRAGM	RAINFORCED NEOPRENE RUBBER
17	STUD & NUT	ASTM A193 B7 / A 192 2H
18	GUIDE BUSH	PTFE
19	POSITIONER	ALUMINUM DIE CAST
20	"O" RING	NEOPRENE

Type of Control Valve Actuators & Body

SUNFORD®

DIRECT ACTING DIAPHRAGM ACTUATOR

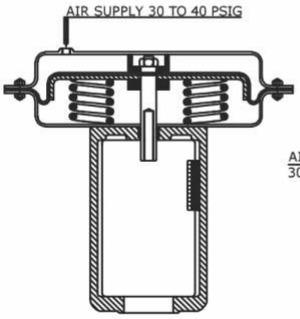

REVERSE ACTING DIAPHRAGM ACTUATOR

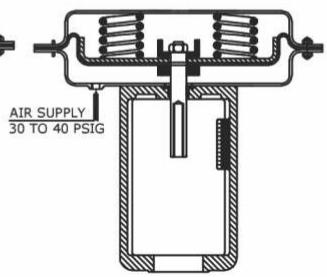

DIRECT ACTING PNEUMATIC CYLINDER ACTUATOR

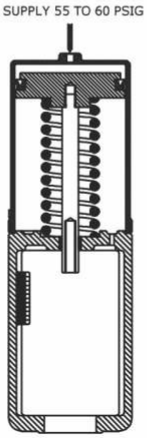

REVERSE ACTING PNEUMATIC CYLINDER ACTUATOR

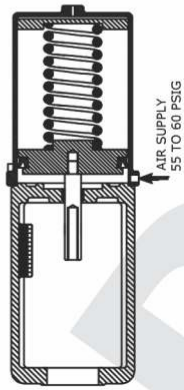

ELECTRIC ACTUATOR

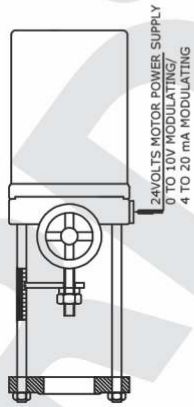

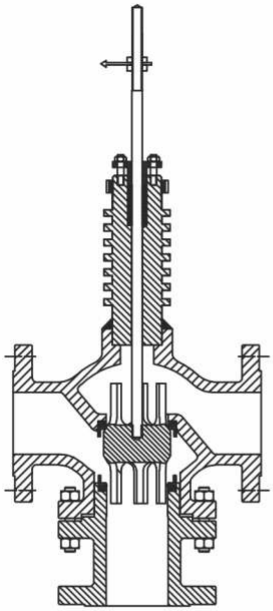

3 WAY CONTROL VALVE WITH EXTENDED FINNED BONNET

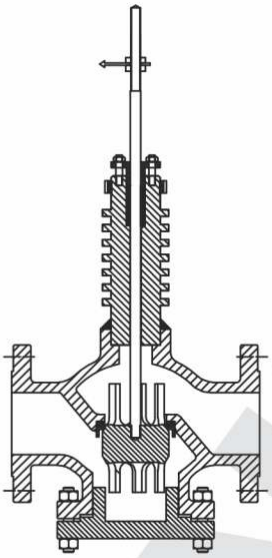

2 WAY CONTROL VALVE WITH EXTENDED FINNED BONNET

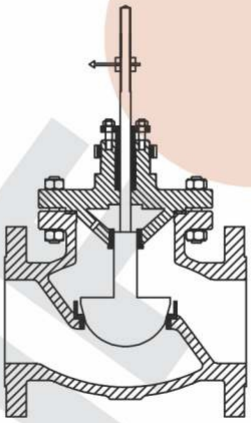

2 WAY GLOBE TYPE CONTROL VALVE WITH STANDARD BONNET

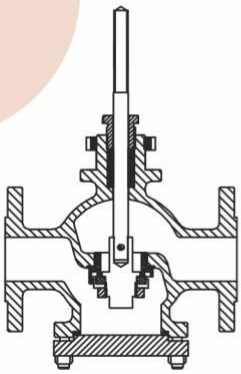

2 WAY SOFT SEAT CONTROL VALVE FOR ON OFF SERVICE

DIRECT ACTING NORMALLY OPEN VALVE INSTALLATION

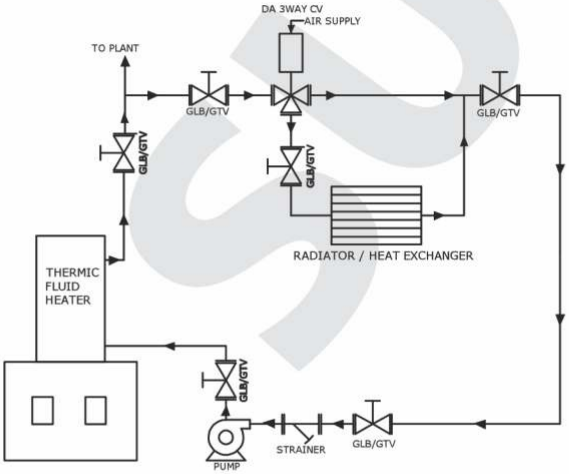

DIRECT ACTING NORMALLY CLOSE VALVE INSTALLATION

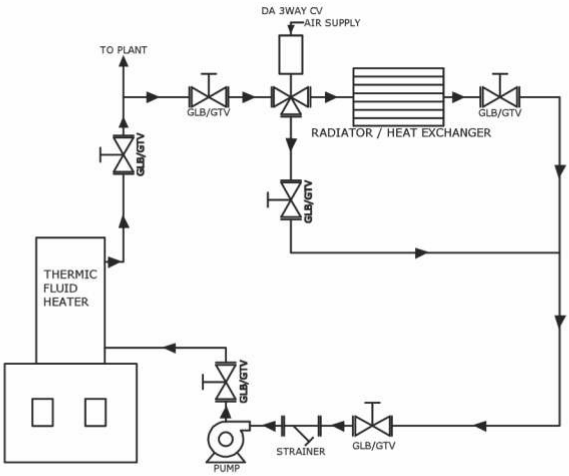

Control Valve 2way Class 150/300 (Soft Seated - On/Off)

SUNFORD®

DESIGN & MANUFACTURING STANDARDS

FACE TO FACE	:	As per Below Table
FLANGED END CONNECTIONS	:	ASME B 16.5
PRESSURE TEMP. RATINGS	:	ASME B 16.34
BUTT WELD DIMENSION	:	API B 16.25
INSPECTION & TESTING	:	API 598/ BS 5146

SPECIAL FEATURES OF SUNFORD VALVES

- High rated Valve capacity and range ability.
- Heavy - Duty ground and polished stems.
- Wide range of interchangeable trim sizes.
- Bellow seals available for positive stem sealing.
- Comprehensively designed and tested to ensure its optimum
- Performance for the tough process parameters specified.
- Motorized Actuator Available.

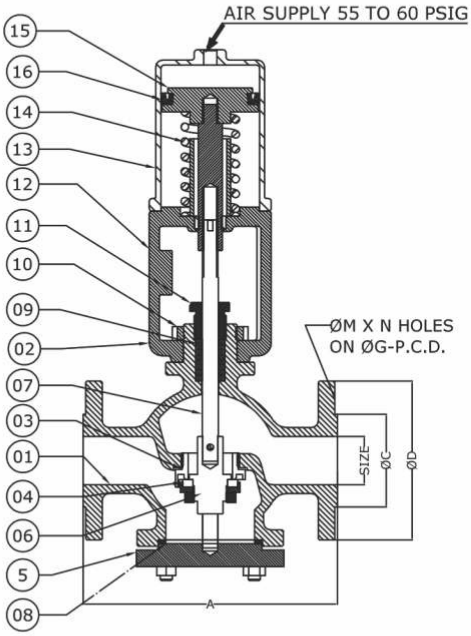

DIMENSIONS CLASS 150			
SIZE	A	B	ØC
25	186	11.1	51
40	200	14.3	73
50	254	16	92
65	279	17.5	105
80	300	19.1	127
ØD	ØM	N	ØG
108	16	4	79
125	16	4	98.5
150	19	4	121
180	19	4	140
190	19	4	152

TOLERANCE ± 2.0 MM

PART LIST		
SR. NO.	ITEM DESCRIPTION	MATERIAL
1	BODY	ASTM A216 GR. WCB / CF8 / CF8M
2	BONNET	ASTM A216 GR. WCB / CF8 / CF8M
3	SEAT	AISI 304 / 316
4	PLUG TEFLON	VIRGIN PTFE / GFT / CFT
5	TAIL PIECE	ASTM A216 GR. WCB / CF8 / CF8M
6	PLUG	AISI 304 / 316
7	STEM	AISI 304 / 316
8	GASKET	S.S. 304 SPW + GRAPHITE
9	GLAND	GRAPHOIL
10	LOCK NUT	MS
11	GLAND NUT	AISI 304 / 316 / 410
12	ACTUATOR STAND	SG IRON / ASTM A216 GR. WCB
13	CYLINDER	ALUMINUM
14	SPRING	STAINLESS STEEL
15	PISTON	SG IRON
16	"V" RING	NITRILE RUBBER / VITON RUBBER

Y Type Control Valve Class 150 (Soft Seated - On/Off)

SUNFORD®

DESIGN & MANUFACTURING STANDARDS

FACE TO FACE	:	As per Below Table
FLANGED END CONNECTIONS	:	ASME B 16.5
PRESSURE TEMP. RATINGS	:	ASME B 16.34
BUTT WELD DIMENSION	:	API B 16.25
INSPECTION & TESTING	:	API 598/ BS 5146

PART LIST		
SR. NO.	ITEM DESCRIPTION	MATERIAL
1	BODY	SS 304, SS 316
2	BONNET	SS 304, SS 316
3	SEAT	PTFE
4	PLUG	SS 304
5	STEM	SS 304, SS 316
6	GASKET	PTFE, GRAPHITE
7	GLAND	PTFE, GRAPHOIL
8	BOTTOM PLATE	SS 304
9	CYLINDER	ALUMINIUM
10	NUT	SS 304

ANSI CLASS 150 - DIMENSIONS								
SIZE	A1	A2	B	ØC	ØD	ØM	ØM	ØG
15	128	73	9.6	35	90	16	4	60.3
20	148	73	10.6	43	100	16	4	69.9
25	167	91	11.1	51	110	16	4	79.4
40	200	130	14.3	73	125	16	4	98.4
50	235	151	16	92	150	16	4	120.7
65	290	-	17.5	105	180	19	4	139.7
80	310	-	19.1	127	190	19	4	152.4

TOLERANCE ± 2.0 MM

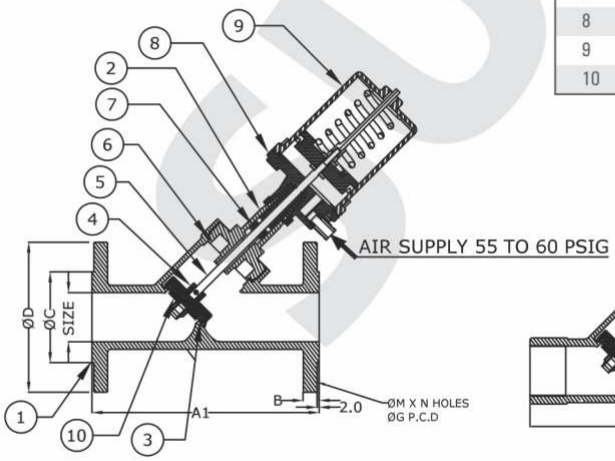

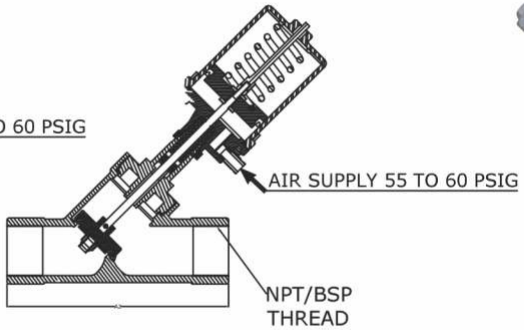

SUNFORD®

Manual & Automation (Pneumatic & Electric)

- **Two Piece Ball Valves** (ANSI CLASS 150/300/600)
- **Three Piece Ball Valves** (ANSI CLASS 150/300/600)
- **Single Piece Ball Valves** (ANSI CLASS 150/300/600)
- **Jacketed Ball Valves** (ANSI CLASS 150/300/600)
- **Three Way Ball Valves** (ANSI CLASS 150/300)
- **Ball Valves With Extended Spindle** (ANSI CLASS 150/300/600)

Ball Valve Full Bore 1pcs F/Ends Class 150/300

SUNFORD®

DESIGN & MANUFACTURING STANDARDS

VALVE DESIGN / SHELL THICKNESS	:	BS5351 / API 6D
FACE TO FACE	:	ANSI B16.10 / API 6D
FLANGED END CONNECTIONS	:	ASME B 16.5
PRESSURE TEMP. RATINGS	:	ASME B 16.34
INSPECTION & TESTING	:	API 598
FIRE SAFE	:	API 607
BUTTWELD ENDS	:	ASME B16.25

SPECIAL FEATURES OF SUNFORD VALVES

- Extra high cycle life provide by spherical segment stem
- Investment cast body (investment casting) Construction
- Blow-out proof stem
- Anti-static feature available
- ISO 5211 Mounting Dimensions for easy automation
- Fire Safe in compliance with API 607
- Triple stem sealing above 2" size
- Air Cushioned handle sleeve for Comfortable manual Operation
- Double body seal feature to suitable for high pressure

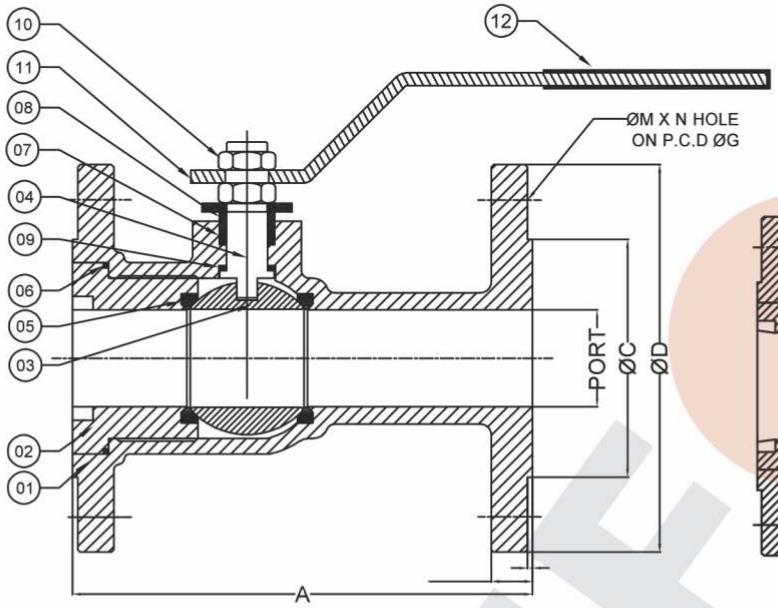

FULL BORE

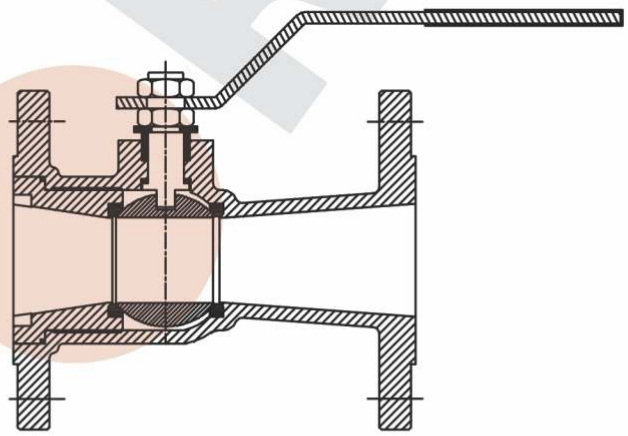

REDUCE BORE

HYDRAULIC TEST PRESSURE 150#		
1	BODY	32 KG/CM^2
2	SEAT	23 KG/CM^2

HYDRAULIC TEST PRESSURE 300#		
1	BODY	78 KG/CM^2
2	SEAT	58 KG/CM^2

HYDRAULIC TEST PRESSURE 600#		
1	BODY	150 KG/CM^2
2	SEAT	110 KG/CM^2

PNEUMATIC TEST PRESSURE		
1	AIR PRESSURE TEST	08 KG/CM^2

ANSI CLASS 150 - DIMENSIONS

SIZE	PORT	A	B	ØC	ØD	ØM	N	ØG
15	13.5	108	9.6	34.9	90	16	4	60.3
20	19	117	10.6	42.9	100	16	4	69.9
25	25	127	11	50.8	110	16	4	79.4
40	38	165	14.3	73.0	125	16	4	98.4
50	50	178	16	92.1	150	19	4	120.7
65	50	190	17.5	104.8	180	19	4	139.7
80	65/50	203	19	127.0	190	19	4	152.4
100	80	229	24	157.2	230	19	8	190.5
150	100	394	25	215.9	280	22	8	241.3

TOLERANCE ± 2.0 MM

PART LIST

SR. NO.	ITEM DESCRIPTION	MATERIAL
1	BODY	ASTMA 216 GR WCB / A351 GR. CF8/CF8M
2	END NUT	ASTMA 216 GR WCB / A351 GR. CF8/CF8M
3	BALL	ASTM A351 GR. CF8/CF8M / AISI 316 / 304
4	STEM	SS 304 / SS 316
5	SEAT RING	VIRGIN PTFE / CFT / GFT
6	BODY RING	VIRGIN PTFE / CFT / GFT
7	GLAND RING	VIRGIN PTFE / CFT / GFT
8	GLAND	SS 304 / SS 316
9	STEM SEAL	VIRGIN PTFE / CFT / GFT
10	LEVER NUT	SS 304 / SS 316
11	HANDLE	SS 410 / SS 304 / SS 202 / MS
12	SLEEVE	P.V.C.

Ball Valve Full Bore 2pcs F/Ends Class 150/300/600

SUNFORD®

DESIGN & MANUFACTURING STANDARDS

VALVE DESIGN / SHELL THICKNESS	: BS5351 / API 6D
FACE TO FACE	: ANSI B16.10 / API 6D
FLANGED END CONNECTIONS	: ASME B 16.5
PRESSURE TEMP. RATINGS	: ASME B 16.34
INSPECTION & TESTING	: API 598
FIRE SAFE	: API 607
BUTTWELD ENDS	: ASME B16.25

SPECIAL FEATURES OF SUNFORD

- Extra high cycle life provide by spherical segment stem
- Split body design facilitates inspection and repair
- Investment cast body (investment casting) Construction
- Blow-out proof stem
- Anti-static feature available
- ISO 5211 Mounting Dimensions for easy automation
- Fire Safe in compliance with API 607
- Triple stem sealing above 2" size
- Air Cushioned handle sleeve for Comfortable manual Operation
- Double body seal feature to suitable for high pressure

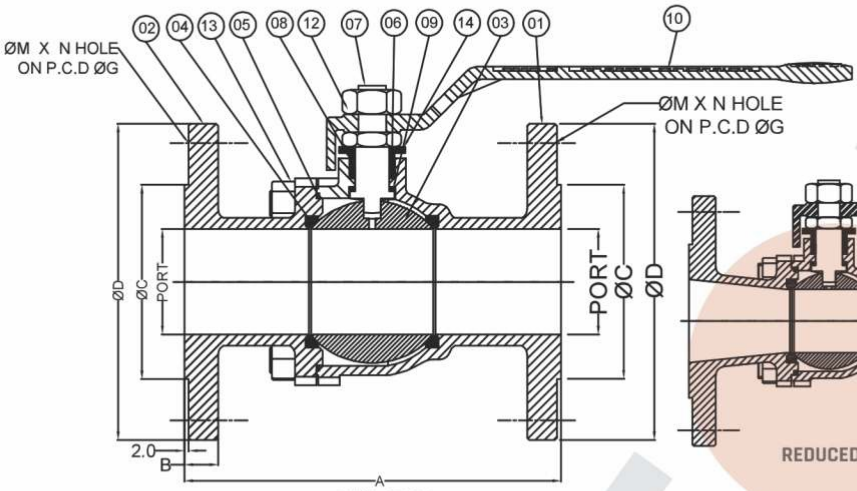

FULL BORE

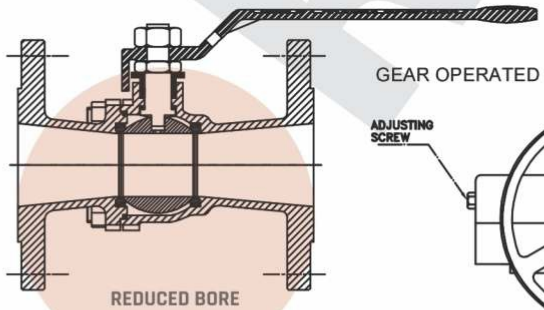

REDUCED BORE

GEAR OPERATED 8" AND ABOVE

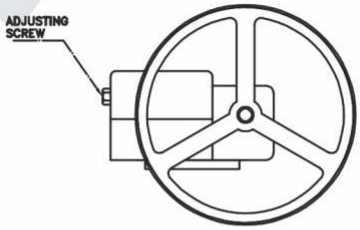

HYDRAULIC TEST PRESSURE 150#			HYDRAULIC TEST PRESSURE 600#		
1	BODY	32 KG/CM^2	1	BODY	150 KG/CM^2
2	SEAT	23 KG/CM^2	2	SEAT	110 KG/CM^2
HYDRAULIC TEST PRESSURE 300#			**PNEUMATIC TEST PRESSURE**		
1	BODY	78 KG/CM^2	1	AIR PRESSURE TEST	08 KG/CM^2
2	SEAT	58 KG/CM^2			

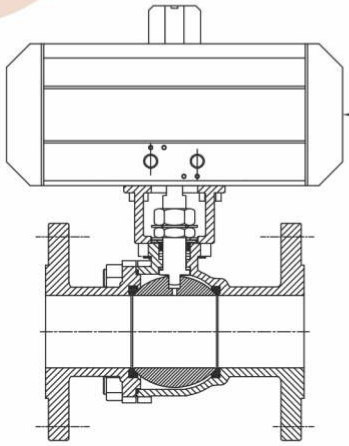

BALL VALVE WITH ACTUATOR

PART LIST

SR. NO.	ITEM DESCRIPTION	MATERIAL
1	BODY	ASTM A 216 GR. WCB / A352
2	SIDE PIECE	LCB / A 217 WC6 / A 351 CF8 / CF8M / CF3 / CF 3M
3	BALL	AISI 304 / 316 / ASTM A351 GR. CF8 / CF8M
4	SEAT RING	VIRGIN PTFE / GFT / CFT
5	BODY RING	VIRGIN PTFE / GFT / CFT
6	GLAND RING	VIRGIN PTFE / GFT / CFT
7	STEM	S.S. 304 / 316
8	GLAND	S.S. 304 / 316
9	STEM SEAL	VIRGIN PTFE / GFT / CFT
10	LEVER	SS 410 / 304 / 316 / 202 / M.S.
11	LEVER SLEEVE	P.V.C.
12	LEVER NUT	S.S. 304 / 316
13	STUD & NUT	S.S. 304 / 316
14	BELLY VELLY WASHER	S.S. 304 / 316

ANSI CLASS 150 - DIMENSIONS

SIZE	A	B	ØC	ØD	ØM	N	ØG
15	108	9.6	34.9	90	16	4	60.3
20	117	10.6	42.9	100	16	4	69.9
25	127	11	50.8	110	16	4	79.4
40	165	14.3	73.0	125	16	4	98.4
50	178	16	92.1	150	19	4	120.7
65	190	17.5	104.8	180	19	4	139.7
80	203	19	127.0	190	19	4	152.4
100	229	24	157.2	230	19	8	190.5
125	254	24	186	255	22	8	216
150	394	25	216	280	22	8	241.3

TOLERANCE ± 2.0 MM

Ball Valve Full Bore 3pcs F/Ends Class 150/300/600

SUNFORD®

DESIGN & MANUFACTURING STANDARDS

VALVE DESIGN / SHELL THICKNESS	:	BS5351 / API 6D
FACE TO FACE	:	ANSI B16.10 / API 6D
FLANGED END CONNECTIONS	:	ASME B 16.5
PRESSURE TEMP. RATINGS	:	ASME B 16.34
INSPECTION & TESTING	:	API 598
FIRE SAFE	:	API 607
BUTTWELD ENDS	:	ASME B16.25

SPECIAL FEATURES OF SUNFORD VALVES

- Extra high cycle life provide by spherical segment stem
- Split body design facilitates inspection and repair
- Investment cast body (investment casting) Construction
- Blow-out proof stem
- Anti-static feature available
- ISO 5211 Mounting Dimensions for easy automation
- Fire Safe in compliance with API 607
- Triple stem sealing above 2" size
- Air Cushioned handle sleeve for Comfortable manual Operation
- Double body seal feature to suitable for high pressure

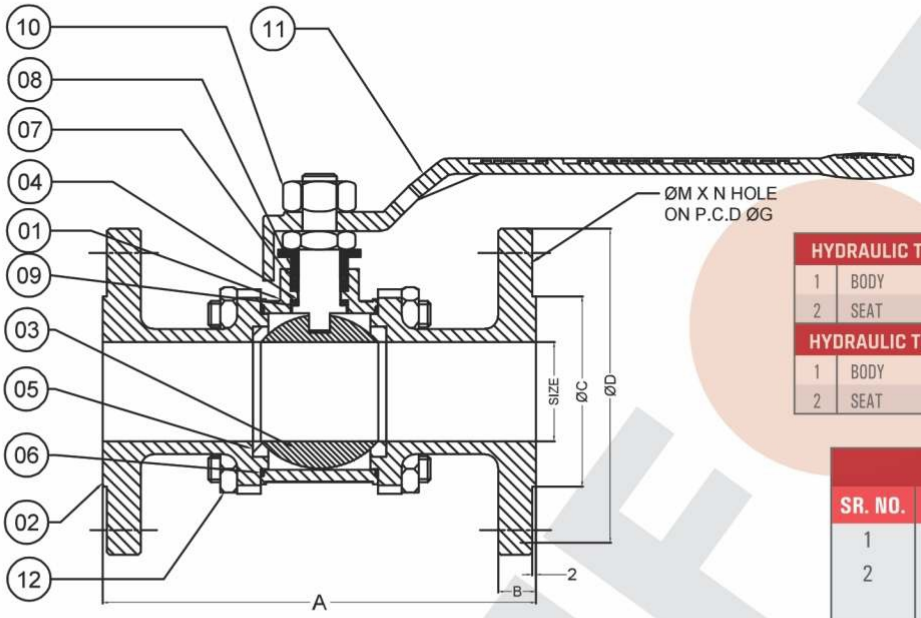

HYDRAULIC TEST PRESSURE 150#		
1	BODY	32 KG/CM^2
2	SEAT	23 KG/CM^2

HYDRAULIC TEST PRESSURE 300#		
1	BODY	78 KG/CM^2
2	SEAT	58 KG/CM^2

HYDRAULIC TEST PRESSURE 600#		
1	BODY	150 KG/CM^2
2	SEAT	110 KG/CM^2

PNEUMATIC TEST PRESSURE		
1	AIR PRESSURE TEST	08 KG/CM^2

PART LIST

SR. NO.	ITEM DESCRIPTION	MATERIAL
1	BODY	ASTM A 216 GR. WCB / A352
2	SIDE PIECE	LCB / A 217 WC6 / A 351 CF8 / CF8M / CF3 / CF 3M
3	BALL	AISI 304 / 316 / ASTM A351 GR. CF8 / CF8M
4	STEM	S.S. 304 / 316
5	SEAT RING	VIRGIN PTFE / GFT / CFT
6	BODY RING	VIRGIN PTFE / GFT / CFT
7	GLAND RING	VIRGIN PTFE / GFT / CFT
8	GLAND	S.S. 304 / 316
9	STEM SEAL	VIRGIN PTFE / GFT / CFT
10	LEVER NUT	SS 304
11	HANDLE	SS 410 / 304 / 316 / 202 / M.S.
12	NUT & WASHER	S.S. 316

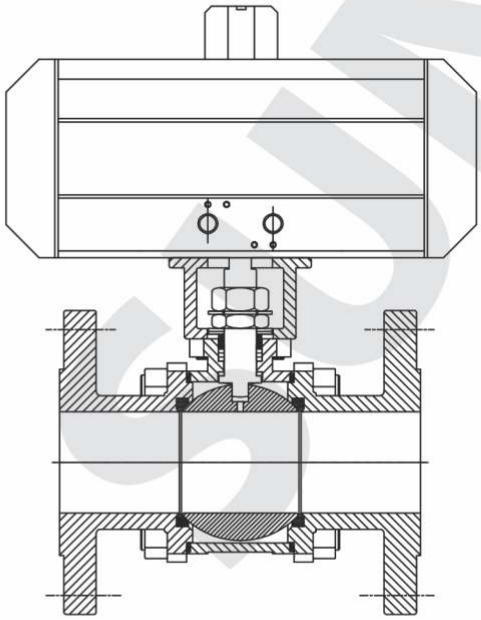

BALL VALVE WITH ACTUATOR

ANSI CLASS 150 - DIMENSIONS

PORT	A	B	ØC	ØD	ØM	N	ØG
15	108	9.6	34.9	90	16	4	60.3
20	117	10.6	42.9	100	16	4	69.9
25	127	11	50.8	110	16	4	79.4
40	165	14.3	73.0	125	16	4	98.4
50	178	16	92.1	150	19	4	120.7
65	190	17.5	104.8	180	19	4	139.7
80	203	19	127.0	190	19	4	152.4
100	229	24	157.2	230	19	8	190.5
150	394	25	216	280	22	8	241.3

TOLERANCE ± 2.0 MM

Ball Valves With Actuators

AVAILABLE MATERIAL

- Body & Side Piece : CF8M, CF8, CF3M, WCB & Special Alloys
- Seat & Seals : PTFE, RPTFE, Carbon Filled PTFE, SS Filled PTFE, Grafoil.

CODES & STANDARDS

Design & Manufacturing : ISO 17292 (BS5351) / API 6D
Face to Face Dimension : ANSI B16.10 / API 6D
Inspection & Testing : ISO EN 12266 - PART I (BS6755-1)

ELECTRIC ACTUATOR

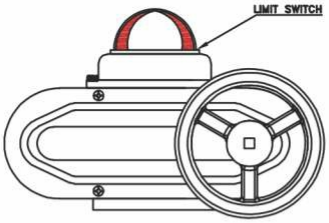

ELECTRIC ACTUATOR SUPPLY
ON/OFF - 220V AC / 24V DC

FOR MODULATING SERVICE
MOTOR SUPPLY - 220V AC/ 24V DC
FOR MODULATING-4 TO 20mA DC

PNEUMATIC ACTUATOR

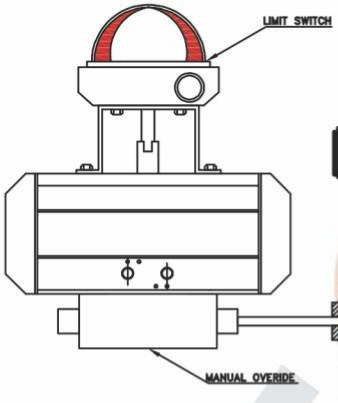

PNEUMATIC ACTUATOR WITH POSITIONER

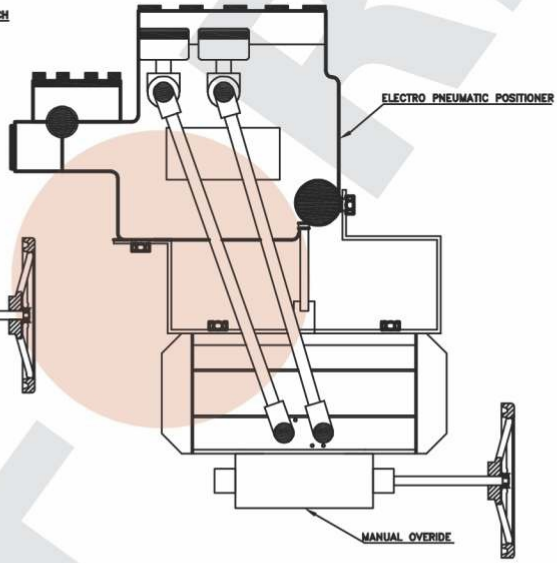

OPTIONAL ACCESSORIES ON DOUBLE ACTING/SINGLE ACTING PNEUMATIC ROTARY ACTUATED BALL VALVES

- SOLENOID VALVE 24V DC / 220V AC
- LIMIT SWITCH
- AFR
- MANUAL OVERIDE
- ELECTRO PNEUMATIC POSITIONER

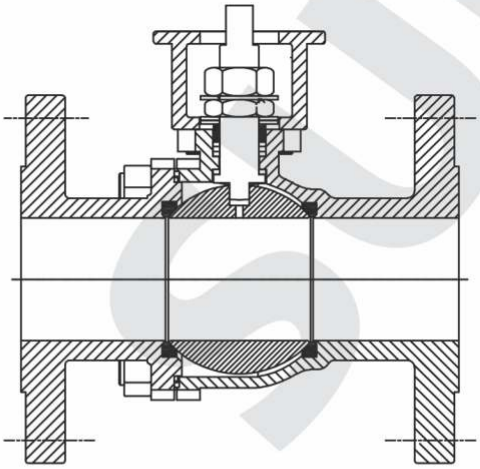

TWO PIECE DESIGN BALL VALVE
WITH ISO PAD & BARE SHAFT

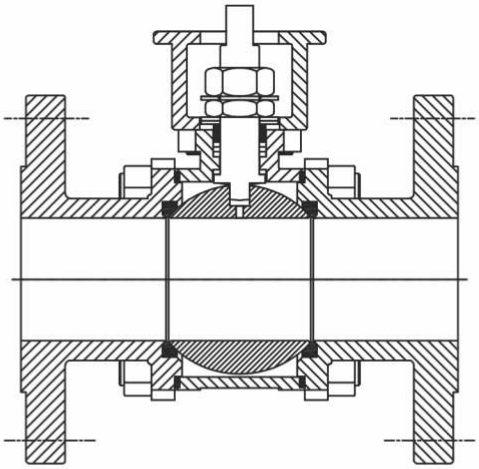

THREE PIECE DESIGN BALL VALVE
WITH ISO PAD & BARE SHAFT

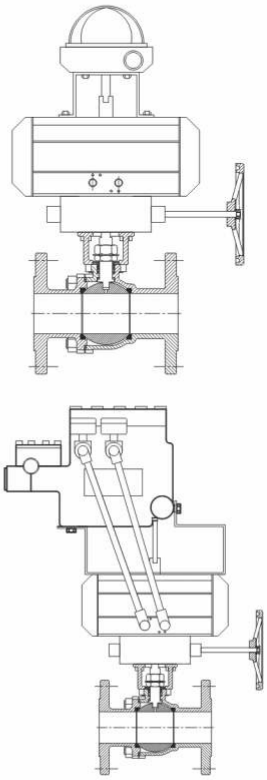

Ball Valve 1 pcs Screw Ends

SUNFORD®

DESIGN & MANUFACTURING STANDARDS

VALVE DESIGN / SHELL THICKNESS	:	BS 5351
FACE TO FACE	:	ASME B 16.10
FLANGED END CONNECTIONS	:	ASME B 16.5
PRESSURE TEMP. RATINGS	:	ASME B 16.34
INSPECTION & TESTING	:	API 598

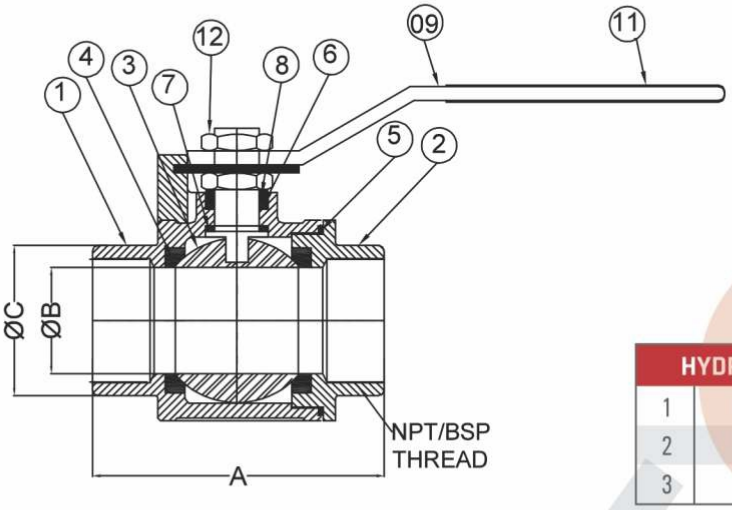

PART LIST

SR. NO.	ITEM DESCRIPTION	MATERIAL
1	BODY	ASTM A351 GR. CF8 / CF8M
2	SIDE PIECE	ASTM A351 GR. CF8 / CF8M
3	BALL	ASTM A351 GR. CF8 / CF8M
4	SEAT RING	VIRGIN PTFE / CFT / GFT
5	BODY RING	VIRGIN PTFE / CFT / GFT
6	GLAND RING	VIRGIN PTFE / CFT / GFT
7	STEM	SS 304 / SS 316
8	GLAND	SS 304 / SS 316
9	LEVER	SS 304 / SS 316
10	LEVER SLEEVE	P.V.C.
11	LEVER NUT	SS 304 / SS 316

HYDRAULIC TEST PRESSURE

1	BODY TEST	32 Kg / cm²
2	SEAT TEST	23 Kg / cm²
3	AIR TEST	07 Kg / cm²

DIMENSIONS

SIZE	A	ØB	ØC	THREAD (FEMALE)
15	65	12.5	26	BSP
20	72	19	32	BSP
25	84	25	40	BSP
40	100	38	56	BSP
50	112	50	66	BSP

TOLERANCE ± 2.0 MM

Ball Valve 1 pcs Screw Ends

SUNFORD®

DESIGN & MANUFACTURING STANDARDS

VALVE DESIGN / SHELL THICKNESS	:	BS 5351
FACE TO FACE	:	ASME B 16.10
FLANGED END CONNECTIONS	:	ASME B 16.5
PRESSURE TEMP. RATINGS	:	ASME B 16.34
INSPECTION & TESTING	:	API 598

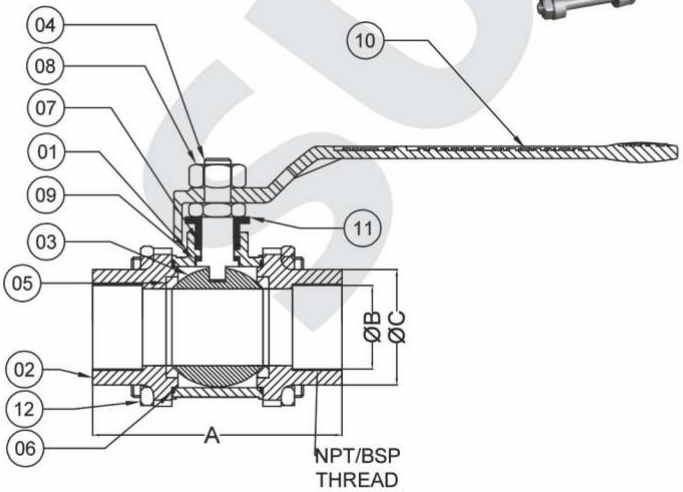

PART LIST

SR. NO.	ITEM DESCRIPTION	MATERIAL
1	BODY	ASTM A 216 GR. WCB / A 352 LCB /
2	END NUT	A 217/WC6/A 351 CF8/CF8M/CF3/CF 3M
3	BALL	AISI 304 / 3016 / ASTM A351 GR. CF8/CF8M
4	STEM	S.S. 304 / 316
5	SEAT RING	VIRGIN PTFE / GFT / CFT
6	BODY RING	VIRGIN PTFE / GFT / CFT
7	GLAND RING	VIRGIN PTFE / GFT / CFT
8	GLAND NUT	S.S. 304 / 316
9	STEM SEAL	VIRGIN PTFE / GFT / CFT
10	HANDLE	AISI 202 / 304 / 316
11	BELLY VELLY WASHER	S.S. 304 / 316
12	NUT & WASHER	S.S. 304 / 316

HYDRAULIC TEST PRESSURE

1	BODY TEST	32 Kg / cm²
2	SEAT TEST	23 Kg / cm²
3	AIR TEST	07 Kg / cm²

DIMENSIONS

SIZE	A	ØB	THREAD (FEMALE)	ØC
15	77	12.5	BSP/NPT	26
20	84	19	BSP/NPT	32
25	90	25	BSP/NPT	41
40	11	38	BSP/NPT	56
50	127	50	BSP/NPT	67

TOLERANCE ± 2.0 MM

Jacketed Ball Valves Class 150/300/600

SUNFORD®

DESIGN & MANUFACTURING STANDARDS

VALVE DESIGN / SHELL THICKNESS	:	BS 5351
FACE TO FACE	:	ASME B 16.10
FLANGED END CONNECTIONS	:	ASME B 16.5
PRESSURE TEMP. RATINGS	:	ASME B 16.34
INSPECTION & TESTING	:	API 598

GEAR OPERATED 6" X 8" & ABOVE

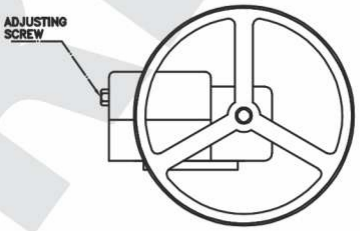

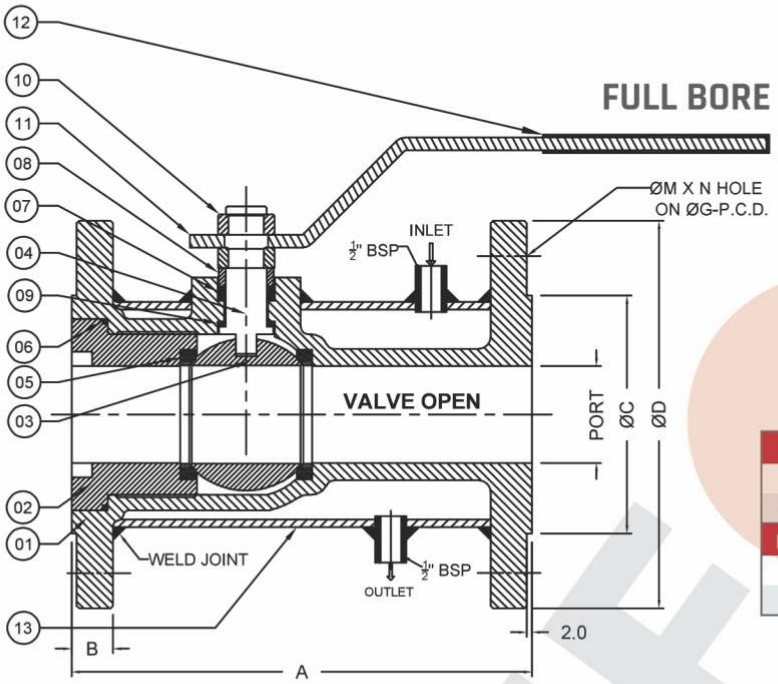

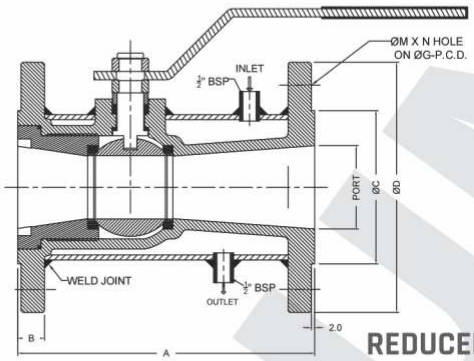

REDUCED BORE

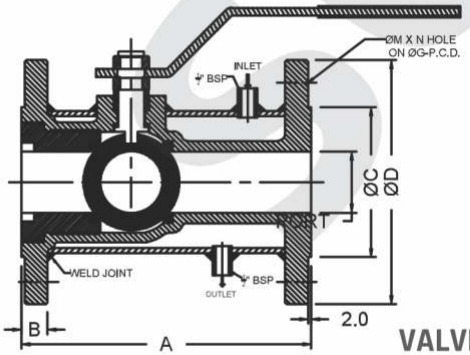

VALVE CLOSED

HYDRAULIC TEST PRESSURE 150#			HYDRAULIC TEST PRESSURE 600#		
1	BODY	32 KG/CM^2	1	BODY	150 KG/CM^2
2	SEAT	23 KG/CM^2	2	SEAT	110 KG/CM^2
HYDRAULIC TEST PRESSURE 300#			**PNEUMATIC TEST PRESSURE**		
1	BODY	78 KG/CM^2	1	AIR PRESSURE TEST	08 KG/CM^2
2	SEAT	58 KG/CM^2			

PART LIST

SR. NO.	ITEM DESCRIPTION	MATERIAL
1	BODY	ASTM A216 WCB, ASTM A351 GR.
2	SIDE PIECE	CF8 / CF8M
3	BALL	ASTM A351 GR. CF8 / CF8M
4	STEM	S.S. 304 / 316
5	SEAT RING	VIRGIN PTFE / CFT / GFT
6	BODY RING	VIRGIN PTFE / CFT / GFT
7	GLAND RING	VIRGIN PTFE / CFT / GFT
8	GLAND	SS304 / SS316
9	STEM SEAL	VIRGIN PTFE
10	LEVER NUT	SS304 / SS316
11	HANDLE	SS202 / SS304 / SS316 / SS410
12	SLEEVE	P.V.C.
13	NUT & WASHER	CS

ANSI CLASS -150 DIMENSIONS

SIZE	PORT	A	B	ØC	ØD	ØM	N	ØG
15 X 25	15	108	11	51	110	16	4	79
20 X 25	20	117	11	51	110	16	4	79
25 X 40	25	127	14.3	73	125	16	4	98.5
40 X 50	40	165	16	92	150	19	4	121
50 X 80	50	178	19	127	190	19	4	152
65 X 100	65	190	24	157	230	19	8	191
80 X 100	80	203	24	157	230	19	8	191

TOLERANCE ± 2.0 MM

3 Way Ball Valve Class 150

Three Way Ball Valve is available in either "L" Port or "T" Port.
"L" Port Three Way Ball Valve is used for pipelines to switch the flow direction of two flow lines perpendicular with each other.
"T" Port Three Way Ball Valve is used for diverting, mixing or switching the flow direction. Ball passage is able to switch on three flow lines or switch on two of the three flow lines.

FEATURES

- Four Seat for equal seat loading
- Multiple Gland Packing, Seals & Spring Washer for zero leakage from gland.

MOUTING

Interface	:	ISO 5211
Body MOC	:	CS, CF8, CF8M
Trim MOC	:	CF8, CF8M
Seat MOC	:	PTFE, GFT, PEK (Special on Request)
Size	:	1" (25mm) to 8" (200mm)

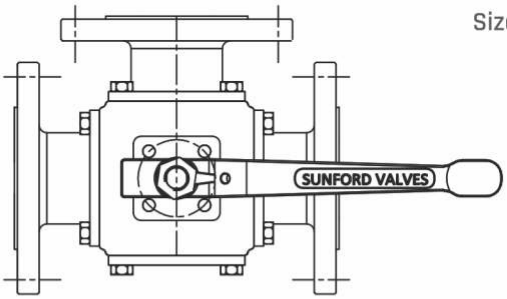

HYDRAULIC TEST PRESSURE 150#		
1	BODY TEST	32 Kg / cm²
2	SEAT TEST	23 Kg / cm²
3	AIR TEST	07 Kg / cm²

Ball Valve with Extended Spindle Class 150/300/600

DESIGN & MANUFACTURING STANDARDS

VALVE DESIGN / SHELL THICKNESS	:	BS 5351
FACE TO FACE	:	ASME B 16.10
FLANGED END CONNECTIONS	:	ASME B 16.5
PRESSURE TEMP. RATINGS	:	ASME B 16.34
INSPECTION & TESTING	:	API 598

ANSI CLASS - 150 DIMENSIONS								
SIZE	PORT	A	B	ØC	ØD	ØM	N	ØG
15	108	9.6	34.9	90	16	4	60.3	24
25	127	11	50.8	110	16	4	79.4	24
40	165	14.3	73.0	125	16	4	98.4	12
50	178	16	92.1	150	19	4	120.7	35
65	190	17.5	104.8	180	19	4	139.7	4
80	203	19	127.0	190	19	4	152.4	36
100	229	24	157.2	230	19	8	190.5	30
150	394	25	216	280	22	8	241.3	18

TOLERANCE ± 2.0 MM

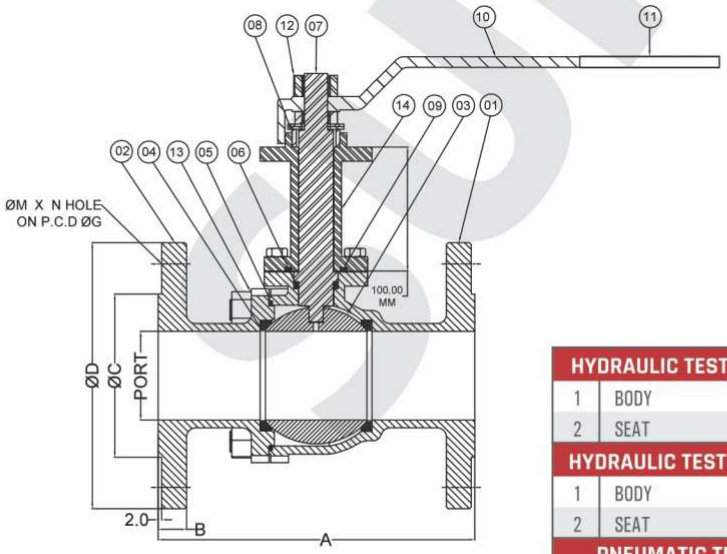

HYDRAULIC TEST PRESSURE 150#		
1	BODY	32 KG/CM²
2	SEAT	23 KG/CM²
HYDRAULIC TEST PRESSURE 300#		
1	BODY	78 KG/CM²
2	SEAT	58 KG/CM²
PNEUMATIC TEST PRESSURE		
1	AIR PRESSURE TEST	08 KG/CM²

PART LIST		
SR. NO.	ITEM DESCRIPTION	MATERIAL
1	BODY	ASTM A216 WCB, ASTM A351 GR.
2	SIDE PIECE	CF8 / CF8M
3	BALL	ASTM A351 GR. CF8 / CF8M (Solid Ball)
4	SEAT RING	CARBON FILLED PTFE / VIRGIN PTFE
5	BODY RING	CARBON FILLED PTFE / VIRGIN PTFE
6	GLAND RING	CARBON FILLED PTFE / VIRGIN PTFE
7	STEM	S.S. 304
8	GLAND	S.S. 304
9	STEM SEAL	CARBON FILLED PTFE / VIRGIN PTFE
10	LEVER	S.S. 410
11	LEVER SLEEVE	P.V.C.
12	LEVER NUT	S.S.
13	STUD & NUT	M.S.
14	EXTENDED BONNET	ASTM A 216 GR. WCB / CF8 / CF8M

BUTTERFLY VALVES

SUNFORD®

- **CENTRIC DISC** (PN10/ PN16)
- **OFFSET DESIGN** (PN10/ PN16)
- **MANUAL**
- **AUTOMATION**

Centric Disc Butterfly Valves PN 10 / PN 16

SUNFORD

DESIGN & MANUFACTURING STANDARDS

VALVE DESIGN / SHELL THICKNESS	:	BS 5155 / API 609 / EN 593 / IS 13095
FACE TO FACE	:	BS 5155 / ISO 5752 / API 609
FLANGED END CONNECTIONS	:	ASME B 16.5 / BS 10 TAB D & E IS 6392 NP 0.6 / 1.0 / 1.6 \
INSPECTION & TESTING	:	API 598 / BS 6755 Part-1 / EN 12266-1

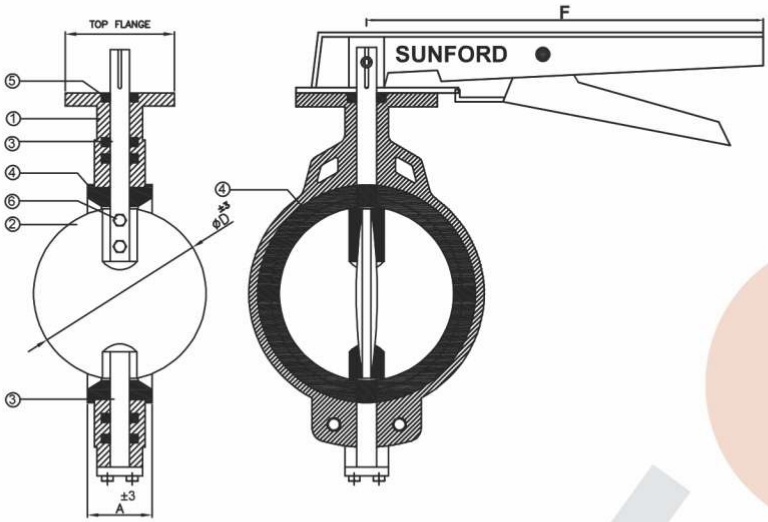

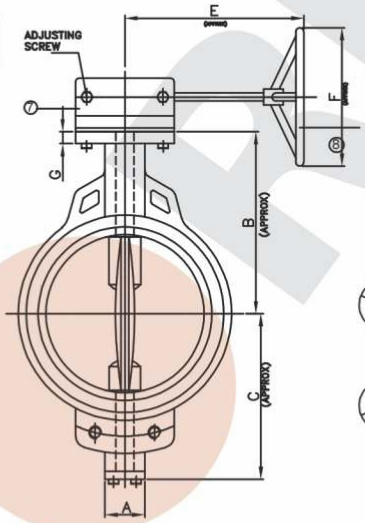

GEAR OPERATED

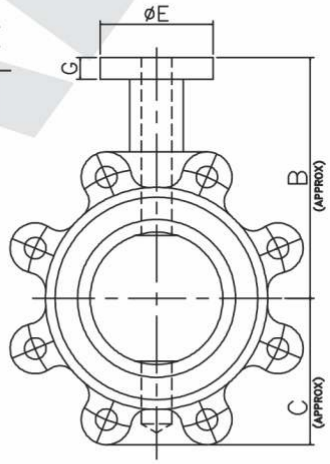

LUG TYPE

PART LIST		
SR. NO.	ITEM DESCRIPTION	MATERIAL
1	BODY	CAST IRON / CAST STEEL / S.S. 304/316
2	DISC	CAST IRON / CAST STEEL / S.S. 304/316
3	SPINDLE	SS 410 / 304 / 316
4	BODY LINING	NITRILE / E.P.D.M. / SILICON / HYPALON
5	'O' RING	NITRILE / E.P.D.M.
6	PIN	S.S. 304 / 316
7	GEAR BOX	CAST IRON
8	HAND WHEEL	M.S. FABRICATED

HANDLE OPERATED VALVE

DIMENSIONS			
VALVE SIZE	A	ØC	F
40	36	37	180
50	43	50	180
65	46	63	180
80	46	76	215
100	52	100	215
125	56	125	215
150	56	150	265
200	60	200	325

TOLERANCE ± 2.0 MM

PRESSURE RATING	Hydrostatic Shell Test		Hydrostatic Seat Test	
	Kg/CM2	PSI	Kg/CM2	PSI
PN 16	22	310	22	310
PN 10	15	210	15	210

SEAT TEMPERATURE RANGE

	TEMPERATURE RANGE	
SEAT TYPE	MIN.	MAX
NITRILE	-13°F (-25°C)	212°F (100°C)
EPDM	-13°F (-25°C)	250°F (120°C)
SILICON	- 58°F (-50°C)	356°F (180°C)
VITON	- 23°F (-5°C)	392°F (200°C)
HYPALON	- 4° F (-20°C)	250°F (120°C)

GEAR OPERATED VALVE

SIZE		A	B	C	D	E	F	G	TOP FLANGE MOUNTING (I.S.O 5211)
MM	INCH								
200	8"	60	230	156	200	285	300	15	F10
250	10"	68	266	196	250	285	350	18	F10
300	12"	78	300	230	298	285	350	18	F10
350	14"	92	320	272	348	300	350	22	F12
400	16"	102	385	302	394	305	500	22	F14
450	18"	114	405	325	433	305	500	24	F14

Double Offset Butterfly Valves PN 10

DESIGN & MANUFACTURING STANDARDS

VALVE DESIGN / SHELL THICKNESS	:	BS 5155 / API 609 / EN 593 / IS 13095
FACE TO FACE	:	BS 5155 / ISO 5752 / API 609
FLANGED END CONNECTIONS	:	ASME B 16.5 / BS 10 TAB D & E
		IS 6392 NP 0.6 / 1.0 / 1.6 \
INSPECTION & TESTING	:	API 598 / BS 6755 Part-1 / EN 12266-1

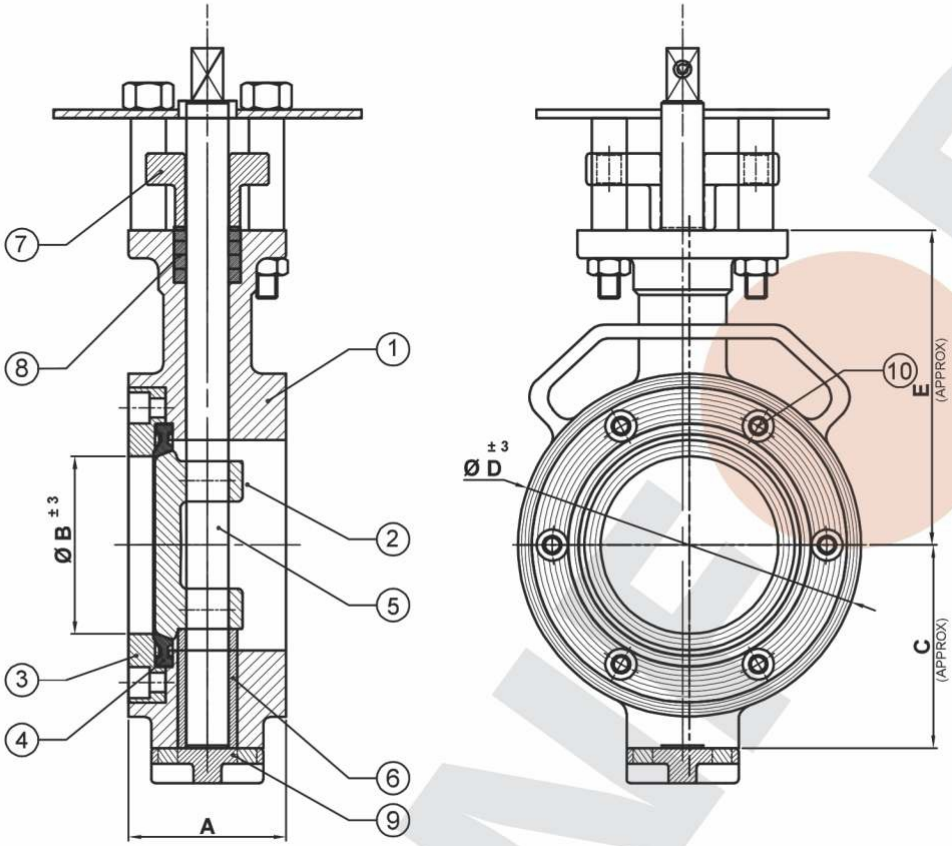

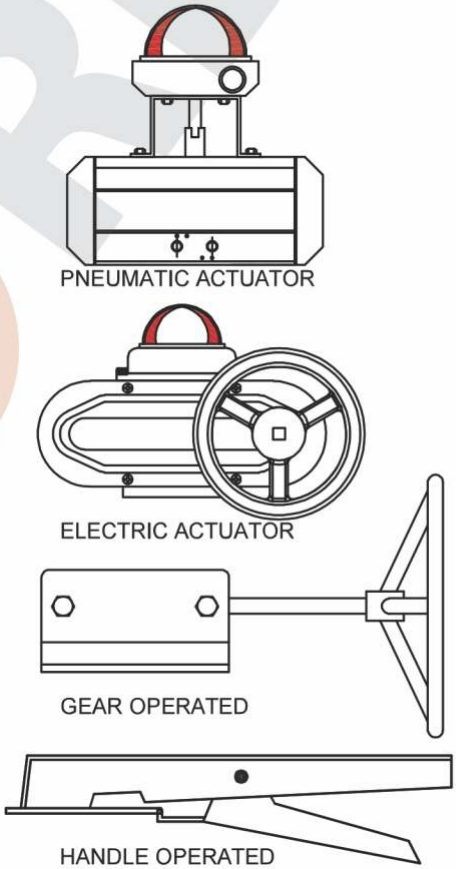

PRESSURE RATING	Hydrostatic Shell Test		Hydrostatic Seat Test	
	Kg/CM2	PSI	Kg/CM2	PSI
PN 10	15	210	10	140

ANSI CLASS - 150 DIMENSIONS

SIZE	A	ØB	C	ØD	E	F
40	42	40	51	85	85	180
50	45	51	58	98	90	180
65	48	61	63	115	102	180
80	48	72	70	131	120	215
100	54	100	86	159	134	215
125	57	123	105	188	154	265
150	57	143	120	219	170	265
200	63	192	145	272	200	325

TOLERANCE ± 2.0 MM

PART LIST

SR. NO.	ITEM DESCRIPTION	MATERIAL
1	BODY	CF8 / CF8M / WCB
2	DISK	CF8 / CF8M
3	RETAINER	CF8 / CF8M / WCB
4	SEAT RING	PTFE / GFT / VITON
5	SHAFT	SS 304 / 316
6	SHAFT BEARING BUSH	SS 304 / 316
7	GLAND	CF8
8	GLAND PACKING	PTFE / CFT / GFT
9	BOTTOM COVER	CF8 / CF8M
10	L.N. BOLT	S.S. 202 / S.S. 304
11	LEVER	M.S. / SS

Wafer Type Butterfly Valve PN 10 / PN 16

SUNFORD®

DESIGN & MANUFACTURING STANDARDS

VALVE DESIGN / SHELL THICKNESS	:	BS 5155 / API 609 / EN 593 / IS 13095
FACE TO FACE	:	BS 5155 / ISO 5752 / API 609
FLANGED END CONNECTIONS	:	ASME B 16.5 / BS 10 TAB D & E IS 6392 NP 0.6 / 1.0 / 1.6 \
INSPECTION & TESTING	:	API 598 / BS 6755 Part-1 / EN 12266-1

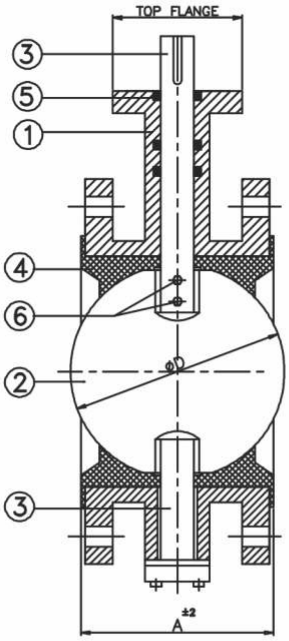

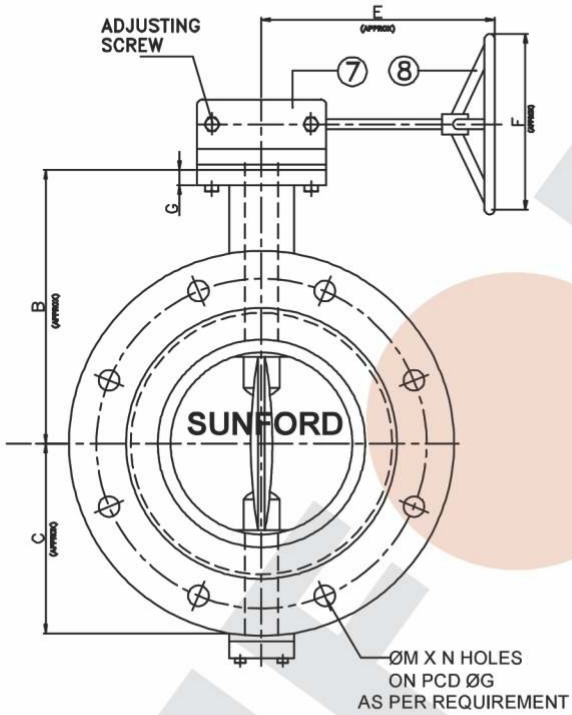

DOUBLE FLANGE CENTRIC DISC TYPE BUTTERFLY VALVE GEAR OPERATED

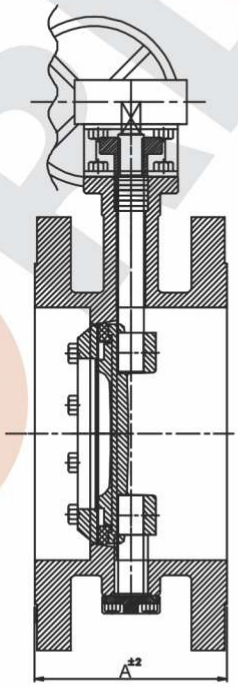

ECENTRIC WAFER TYPE BUTTERFLY VALVE GEAR OPERATED

PART LIST

SR. NO.	ITEM DESCRIPTION	MATERIAL
01	BODY	CAST IRON / CAST STEEL / SS 304
02	DISC	/ SS 316
03	SPINDLE	SS 410 / SS 304 / SS 316
04	BODY LINING	NITRILE / EPDM / SILICON / VITON / HYPALON
05	"O" RING	NITRILE / EPDM
06	HEX BOLT	SS 304 / SS 316
07	GEAR BOX	CAST IRON
08	HAND WHEEL	MS FABRICATED

PRESSURE RATING	Hydrostatic Shell Test		Hydrostatic Seat Test	
	Kg/CM2	PSI	Kg/CM2	PSI
PN 16	22	310	22	310
PN 10	15	210	15	210

ANSI CLASS 150 - DIMENSIONS

SIZE	A	ØB	C	ØD	E	F	G	TOP FLANGE (ISO 5211)
50	108	125	85	50	65	180	15	F05
65	112	125	95	63	65	180	15	F05
80	114	155	102	76	65	215	15	F05
100	127	160	112	100	65	215	15	F05
125	140	180	134	125	65	265	15	F05
150	140	210	147	150	65	265	15	F05
200	152	250	175	200	75	35	15	F07
200	152	250	175	200	285	300	15	F10
250	165	285	208	249	285	350	18	F10
300	178	310	227	297	285	350	18	F10
350	190	340	275	348	300	350	22	F12
400	216	376	308	394	305	500	22	F14
450	222	390	373	433	305	500	24	F14
500	229	425	408	470	370	500	26	F16
600	267	500	464	570	350	600	26	F16

TOLERANCE ± 2.0 MM

FLUSH BOTTOM VALVES

SUNFORD®

- **Flush Bottom Ball Valves** (ANSI CLASS 150/300)
- **Y-Type Flush Bottom Valves** (ANSI CLASS 150/300)
- **Manual & Automation**

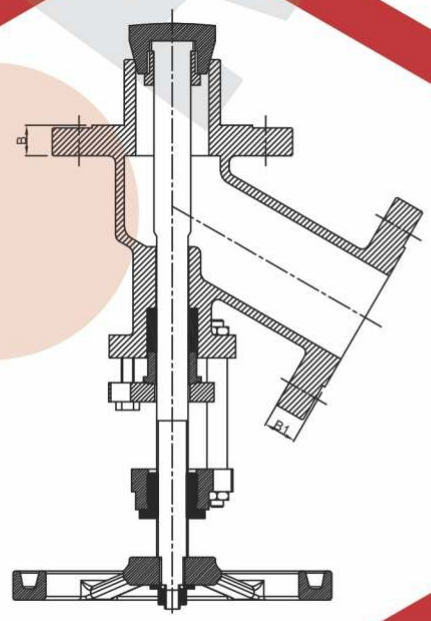

Flush Bottom Ball Valves Class 150/300

SUNFORD®

DESIGN & MANUFACTURING STANDARDS

TESTING & INSPECTION STD. : API 6D / API 598

DESIGN & MANUFACTURING STF. : BS5351 / API 6D

FACE TO FACE : ASME B 16.10

END CONNECTION : ANSI B 16.5

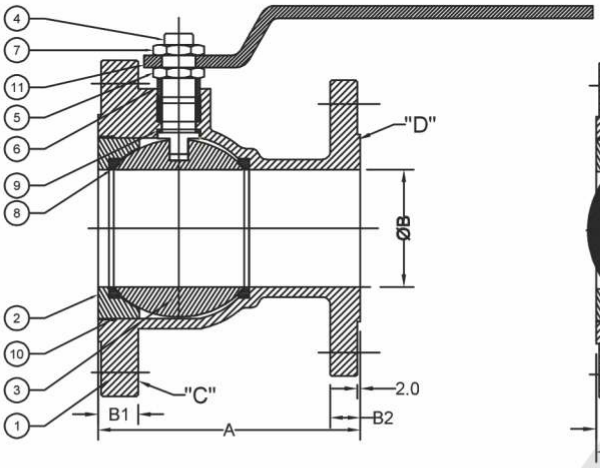

VALVE OPEN

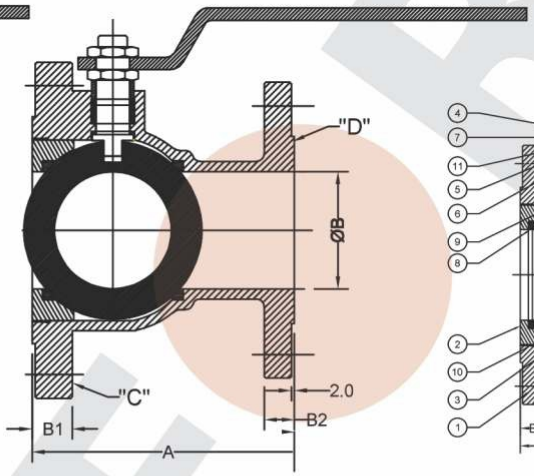

VALVE CLOSED

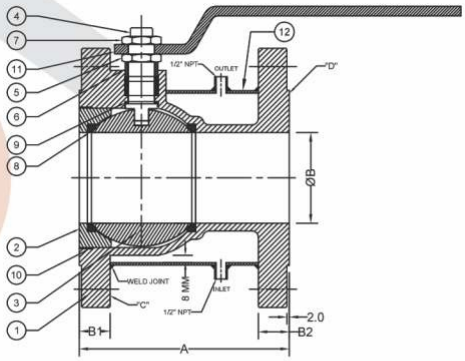

JACKETED FLUSH BOTTOM BALL VALVE

HYDRAULIC TEST PRESSURE 150#		
1	BODY	32 KG/CM^2
2	SEAT	23 KG/CM^2
HYDRAULIC TEST PRESSURE 300#		
1	BODY	78 KG/CM^2
2	SEAT	58 KG/CM^2
PNEUMATIC TEST PRESSURE		
1	AIR PRESSURE TEST	08 KG/CM^2

PART LIST

SR. NO.	ITEM DESCRIPTION	MATERIAL
1	BODY	ASTM A351 GR. CF8M / CF8 / WCB
2	END NUT	ASTM A351 GR. CF8M / CF8 / WCB
3	BALL	SS 316 / 304
4	STEM	SS 316 / 304
5	GLAND NUT	SS 316 / 304
6	GLAND BUSH	SS 316 / 304
7	LOCK NUT	SS 316 / 304
8	SEAT RING	CFT / GFT / VIRGIN PTFE
9	STEM SEAL	VIRGIN PTFE / CFT / GFT
10	BODY SEALRNT RING	VIRGIN PTFE / CFT / GFT
11	LEVER	MS / SS
12	VALVE JACKET	MS FABRICATED

SIZE	DIMENSIONS					
MM	A	B	B	D-FLANGE	B1	B2
15 X 25	70	12.5	25 MM-150#	15 MM-150#	11	11
20 X 25	76	20	25 MM-150#	20 MM-150#	11	11
25 X 40	76	25	40 MM-150#	25 MM-150#	11	11
40 X 50	105	38	50 MM-150#	40 MM-150#	14	14
50 X 80	125	50	80 MM-150#	50 MM-150#	16	16
80 X 100	155	76	100 MM-150#	80 MM-150#	19	19
100 X 150	176	100	150 MM-150#	100 MM-150#	24	24

TOLERANCE ± 2.0 MM

Flush Bottom Valve F/Ends Class 150/300

SUNFORD®

DESIGN & MANUFACTURING STANDARDS

FLANGED END CONNECTIONS : ASME B 16.5

PRESSURE TEMP. RATINGS : ASME B 16.34

INSPECTION & TESTING : API 598

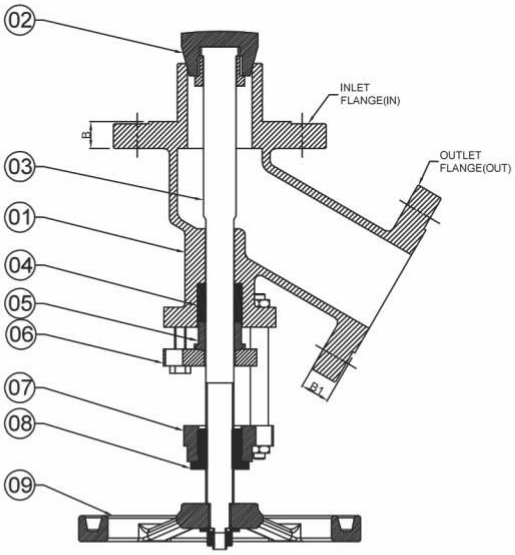

SECTION A-A

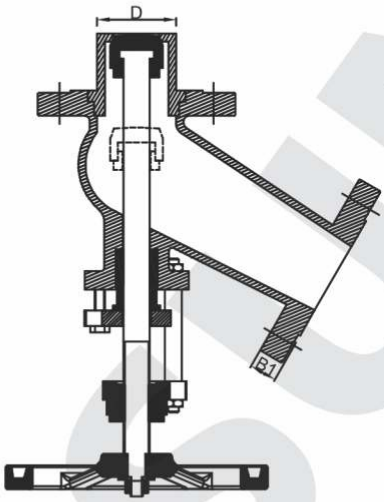

VALVE INSIDE OPENING

PART LIST		
SR. NO.	ITEM DESCRIPTION	MATERIAL
1	BODY	ASTM S.S. 304, S.S 316, ASTM A216 WCB
2	PLUG	AISI S.S. 304, S.S. 316
3	STEM	AISI S.S. 304, S.S. 316
4	GLAND PAKING	PTFE, GRAFOILE
5	GLAND	CS, SS 304
6	GLAND FLANGE	CS, SS 304
7	YOKE BUSH HOUSING	CS, SS 304
8	YOKE BUSH	GUNMETAL / EN8 / D2 / SGI
9	HAND WHEEL	SGI, SS 304

SIZE (MM)		FLANGE DIMENTSIONS		FLANGE DIMENTSIONS	
IN	IN	I	B	I	QTY
20	20	20 NB ASA 150#	11	20 NB ASA 150#	11
25	20	25 NB ASA 150#	11	20 NB ASA 150#	11
25	25	25 NB ASA 150#	11	25 NB ASA 150#	11
40	25	40 NB ASA 150#	14	25 NB ASA 150#	11
40	40	40 NB ASA 150#	14	40 NB ASA 150#	14
50	40	50 NB ASA 150#	16	40 NB ASA 150#	14
50	50	50 NB ASA 150#	16	50 NB ASA 150#	16
80	50	80 NB ASA 150#	19	50 NB ASA 150#	16
80	80	80 NB ASA 150#	19	80 NB ASA 150#	19
100	80	100 NB ASA 150#	24	80 NB ASA 150#	19
100	100	100 NB ASA 150#	24	100 NB ASA 150#	24
150	100	150 NB ASA 150#	25	100 NB ASA 150#	24
150	150	150 NB ASA 150#	25	150 NB ASA 150#	25
200	150	200 NB ASA 150#	28	150 NB ASA 150#	25
200	200	200 NB ASA 150#	28	200 NB ASA 150#	28
250	200	250 NB ASA 150#	30	250 NB ASA 150#	28

HYDRAULIC TEST PRESSURE 150#		
1	BODY	32 KG/CM^2
2	SEAT	23 KG/CM^2

HYDRAULIC TEST PRESSURE 300#		
1	BODY	78 KG/CM^2
2	SEAT	58 KG/CM^2

PNEUMATIC TEST PRESSURE		
1	AIR PRESSURE TEST	08 KG/CM^2

Flange Dimension as per ASME B 16.5 & F to F as per ASME B 16.10

ASME CLASS 150														
SIZE	15	20	25	40	50	65	80	100	125	150	200	250	300	350
GATE VALVE	108	117	127	165	178	190	203	229	254	267	292	330	356	381
GLOBE VALVE	108	117	127	165	203	216	241	292	356	406	495	622	699	787
BALL VALVE	108	117	127	165	178	190	203	229	-	394	457	533	610	686
CHECK VALVE	108	117	127	165	203	216	241	292	330	356	495	622	699	787
STRAINER	108	117	127	165	203	216	241	292	356	406	495	622	699	787
2/3WAY CV	108	117	186	223	254	279	300	365	356	406	495	622	-	-
Bore	12.7	19.1	25.4	38.1	50.8	63.5	76.2	101.6	127	152	203	254	304.8	336.5
Flange Od	90	100	110	125	150	180	190	230	255	280	345	405	485	533
Flange. Th. with RF.	9.6	10.6	11.1 (14)	14.3 (17.9)	16 (19)	17.5 (22.3)	19.1 (24)	24	24	25	28.5	30	32	35
RF Dia	34.9	42.9	51	73	92	105	127	157	186	216	270	324	381	413
RF Height.	2	2	2	2	2	2	2	2	2	2	2	2	2	2
P.C.D.	60.3	69.9	79	98.5	121	140	152	191	216	241	298	362	432	476
No. of Hole	4	4	4	4	4	4	4	8	8	8	8	12	12	16
Hole Dia	16	16	16	16	19	19	19	19	22	22	22	25	25	29

ASME CLASS 300										
25	40	50	65	80	100	125	150	200	250	300
165	190	216	241	282	305	381	403	419	457	502
203	229	267	292	318	356	400	444	559	622	711
165	190	216	241	282	305	403	-	-	-	-
216	241	267	292	318	356	400	444	533	622	711
-	-	-	-	-	-	-	-	-	-	-
-	-	-	-	-	-	-	-	-	-	-
25.4	38.1	50.8	63.5	76.2	101.6	127	152.4	203	254	304.8
125	155	165	190	210	255	280	320	380	445	520
17.5	20.7	22.3	25.4	28.6	31.8	35	36.5	41	47.5	51
51	73	92	105	127	157	186	216	270	324	381
2	2	2	2	2	2	2	2	2	2	2
89	114.5	127	149	168	200	235	270	330	387	451
4	4	8	8	8	8	8	12	12	16	16
19	19	19	22	22	22	22	22	25	19	32

VALVE TRIM CHART

SR. NO.	MATERIAL	SEAT	DISK	BACKSEAT	STEM
1	410	410	410	410	410
2	304	304	304	304	304
3	F310	310	310	310	310
4	HARD 410	Hard 410	Hard 410	410	410
5	HARDFACED	Stellite	Stellite	410	410
5A	HARDFACED	Ni-Cr	Ni-Cr	410	410
6	410 AND Cu-Ni	Cu-Ni	410	410	410
7	410 and Hard 410	Hard 410	Hard 410	410	410
8	410 and Hardfaced	Stellite	410	410	410
8A	410 and Hardfaced	Ni-Cr	410	410	410
9	Monel	Monel	Monel	Monel	Monel
10	316	316	316	316	316
11	Monel and Hardfaced	Stellite	Monel	Monel	Monel
12	316 and Hardfaced	Stellite	316	316	316
13	Alloy 20	Alloy 20	Alloy 20	Alloy 20	Alloy 20
14	Alloy 20 and Hardfaced	Stellite	Alloy 20	Alloy 20	Alloy 20
15	304 and Hardfaced	Stellite	Stellite	304	304
16	316 and Hardfaced	Stellite	Stellite	316	316
17	347 and Hardfaced	Stellite	Stellite	347	347
18	Alloy and Hardfaced	Stellite	Stellite	Alloy 20	Alloy 20

ASME CLASS 600													
SIZE	15	20	25	40	50	65	80	100	125	150	200	250	300
GATE VALVE	-	-	-	-	292	330	356	432	508	559	660	787	838
GLOBE VALVE	-	-	-	-	292	330	356	432	508	559	660	787	838
BALL VALVE	165	190	216	241	292	330	356	432	508	559	660	787	838
CHECK VALVE	-	-	-	-	292	330	356	432	508	559	660	787	838
Bore	12.7	19.1	25.4	38.1	50.8	63.5	76.2	101.6	127	152	203	254	304.8
Flange Od	95	117	124	156	165	190	210	273	330	356	419	508	559
Flange. Th. with RF.	20.6	22	24	28.6	31.8	35	38	44.5	51	54	62	70	73
RF Dia	35	43	51	73	92	105	127	157	186	216	270	324	381
RF Height.	2	2	2	2	2	2	2	2	2	2	2	2	2
P.C.D.	66.5	82.5	89	114	127	149	168	216	267	292	349	432	489
No. of Hole	4	4	4	4	8	8	8	8	8	12	12	16	20
Hole Dia	16	19	19	19	22	22	22	25	29	29	32	35	35

ANSI - American National Standards Institute

B16.34:	Valves - Flanged, Threaded, and Welding End
B16.10:	Face-to-Face and End-to-End Dimensions of Valves
B 16.5:	Pipe Flanges and Flanged Fittings

ASME B16.34/B16.5 (-29 TO +38°C) MAX. WORKING & TEST PRESSURES

ITEM	150	300	600	900	1500	2500
Working Pressure	285	740	990	2220	3705	6170
Shell Test	450	1125	1500	3350	5575	9275
Shell Test	315	815	1090	2445	4047	6790

API - American Petroleum Institute

API 600:	Bolted Bonnet Steel Gate Valve for Petroleum and Natural Gas Industries
API 602:	Compact Steel Gate Valves - Flanged, Threaded, Welding, & Extended-Body Ends
API 598:	Valve Inspection and Testing

TECHNICAL DATA

ANSI B16.34 / 16.5 - Pressure and Temperature Ratings

A216-WCB (Carbon Steel)

Temperature °F (°C)	Pressure, psig (kg/cm2g)					
	150	300	600	900	1500	2500
-20 ~ 100 (-30 ~ 38)	285 (20.0)	740 (52.0)	1480 (104.1)	2220 (156.1)	3705 (260.5)	6170 (433.8)
200 (93)	260 (18.3)	675 (47.5)	1350 (94.9)	2025 (142.4)	3375 (237.3)	5625 (395.5)
300 (149)	230 (16.2)	655 (46.1)	1315 (92.5)	1970 (138.5)	3280 (230.6)	5470 (384.6)
400 (204)	200 (14.1)	635 (44.6)	1270 (89.3)	1900 (133.6)	3170 (222.9)	5280 (371.2)
500 (260)	170 (12.0)	600 (42.2)	1200 (84.4)	1795 (126.2)	2995 (210.5)	4990 (350.8)
600 (316)	140 (9.8)	550 (38.7)	1095 (77.0)	1640 (115.3)	2735 (192.3)	4560 (320.6)
650 (343)	125 (8.8)	535 (37.6)	1075 (75.6)	1610 (113.2)	2685 (188.8)	4475 (314.6)
700 (371)	110 (7.7)	535 (37.6)	1065 (74.9)	1600 (112.5)	2665 (187.4)	4440 (312.2)
750 (399)	95 (6.7)	505 (35.5)	1010 (71.0)	1510 (106.2)	2520 (177.2)	4200 (295.3)
800 (427)	80 (5.6)	410 (28.8)	825 (58.0)	1235 (86.8)	2060 (144.8)	3430 (241.2)

A182-F316, A351-CF3M, CF8M (Stainless Steel)

Temperature °F (°C)	Pressure, psig (kg/cm2g)					
	150	300	600	900	1500	2500
-20 ~ 100 (-30 ~ 38)	275 (19.3)	720 (50.6)	1440 (101.2)	2160 (151.9)	3600 (253.1)	6000 (421.9)
200 (93)	235 (16.5)	620 (43.6)	1240 (87.2)	1860 (130.8)	3095 (217.6)	5160 (362.8)
300 (149)	215 (15.1)	560 (39.4)	1120 (78.7)	1680 (118.1)	2795 (196.5)	4660 (327.6)
400 (204)	195 (13.7)	515 (36.2)	1025 (72.1)	1540 (108.3)	2570 (180.7)	4280 (300.9)
500 (260)	170 (12.0)	480 (33.7)	955 (67.1)	1435 (100.9)	2390 (168.0)	3980 (279.8)
600 (316)	140 (9.8)	450 (31.6)	900 (63.3)	1355 (95.3)	2255 (158.5)	3760 (264.4)
650 (343)	125 (8.8)	445 (31.3)	890 (61.6)	1330 (93.5)	2220 (156.1)	3700 (260.1)
700 (371)	110 (7.7)	430 (30.2)	870 (61.2)	1305 (91.8)	2170 (152.6)	3620 (254.5)
750 (399)	95 (6.7)	425 (29.9)	1010 (71.0)	1280 (90.0)	2135 (150.1)	3560 (250.3)
800 (427)	80 (5.6)	415 (29.2)	845 (59.4)	1265 (88.9)	2110 (148.4)	3320 (247.5)

ASTM MATERIALS COMPOSITION

MATERIAL GRADE SPECIFICATION														
METAL GRADE	CHEMICAL COMPOSITION										MECHANICAL PROPERTIES (MPa)			
	C Max.	Mn Max.	P Max.	S Max.	Si Max.	Cr.	Mo.	Ni	Cu. Max.	V Max.	TENSILE Min.	YIELD Min.	% Elong.	% Red. Area
WCB	0.30	1.00	0.04	0.045	0.60	≤0.50	≤0.20	≤0.50	0.30	0.03	485	250	22	35
WC6	0.20	0.5-0.8	0.04	0.045	0.60	1.0-1.5	0.45-0.65	≤0.50	0.50	-	485	275	20	35
WC9	0.18	0.4-0.7	0.04	0.045	0.60	2.0-2.75	0.90-1.20	≤0.50	0.50	-	655	275	20	35
WCC	0.25	1.20	0.035	0.035	0.60	≤0.50	≤0.20	≤0.50	0.30	0.03	485	275	22	35
C5	0.20	0.4-0.7	0.04	0.045	0.75	4.0-6.50	0.45-0.65	≤0.50	0.50	-	620	415	18	35
LCB	0.30	1.00	0.04	0.045	0.60	≤0.50	≤0.20	≤0.50	0.30	0.03	450	240	24	35
LCC	0.25	1.20	0.04	0.045	0.60	≤0.50	≤0.20	≤0.50	-	0.03	485	275	22	35
CF8	0.08	1.50	0.04	0.040	2.00	18-21	≤0.50	8-11	-	-	485	205	35	-
CF8M	0.08	1.50	0.04	0.040	1.50	18-21	2.0-3.0	9-12	-	-	485	205	30	-
CF3	0.03	1.50	0.04	0.040	2.00	17-21	≤0.50	8-12	-	-	485	205	35	-
CF3M	0.03	1.50	0.04	0.040	1.50	17-21	2.0-3.0	9-13	-	-	485	205	30	-
CN7M	0.07	1.50	0.04	0.040	1.50	19-22	2.0-3.0	27-30.5	3.0-4.0	-	425	170	35	-
CA15	0.15	1.00	0.04	0.030	1.00	11.5-13.5	-	-	0.0-1.0	-	480	275	16	45
A105	0.35	0.6-1.05	0.04	0.050	0.35	≤0.30	≤0.12	≤0.40	0.40	0.08	485	250	22	30
F6	0.15	1.00	0.04	0.030	1.00	11.5-13.5	-	≤0.50	-	-	485	275	18	35
F11	0.1-0.2	0.3-0.8	0.04	0.040	0.5-1.0	1.0-1.5	0.44-0.65	-	-	-	485	275	20	40

DURATION OF TEST AS PER API 598 / ASME B16.34

VALVE SIZE (MM)	Minimum Test Duration (Seconds)				
	SHELL		BACKSEAT	CLOSURE (SEAT)	
	Check Valves	Other Valves		Check Valves	Other Valves
≤50MM	60	15	15	60	15
65MM - 150MM	60	60	60	60	60
200MM - 300MM	60	120	60	60	120
≤350MM	120	300	60	120	120

VALVE SEAT LEAKAGE CLASS ANSI / FCI 70-2

Leakage Class Designation	Maximum Leakage Allowable	Test Medium
II	0.5% of Rated Capacity	Air or Water at 10-52˚C
III	0.1% of Rated Capacity	Air or Water at 10-52˚C
IV	0.01% of Rated Capacity	Air or Water at 10-52˚C
V	0.0005 ml per minute of water per inch of port dia. per psi differential	Water at 10-52˚C (50-125˚F)
VI	Not to exceed amounts shown in standard	Air or Nitrogen at 10-52˚C

CERTIFIED BY

ISO 9001
BUREAU VERITAS
Certification

UKAS QUALITY MANAGEMENT 008

IBR Approved

SUNFORD®

SUNFORD VALVES COMPANY

AN ISO 9001:2015 CERTIFIED COMPANY

Mfg. of High Quality Industial Valves.

"Permanent Flow Control Solution"

CONTACT US

Address:

Plot No. D-9/21, Road No-2,
Nr. Sachin Paper Mill,
Hojiwala Industrial Estate, Sachin,
Surat. Gujarat. India - 394230.

Phone:

+91 9998869651
+91 9374718801
+91 9898495008
+91 9924928889

Mail:

info@sunfordvalves.com,
sunfordvalves@gmail.com,
sales@sunfordvalves.com,

Web:

www.sunfordvalves.com
www.sunfordindia.com